# MOBILE PHONE
# SERVICE MANUAL

CAUTION
BEFORE SERVICING THE UNIT, READ THE “SAFETY PRECAUTIONS” IN THIS MANUAL

VIETMOBILE.VN

**MODEL : LG-K350ds**

# Table Of Contents

**1. INTRODUCTION..... 3**
1.1 Purpose
1.2 Regulatory Information

**2. PERFORMANCE..... 4**
2.1 Band Specification
2.2 HW Features
2.3 RSSI Display
2.4 Current consumption
2.5 Battery bar
2.6 SW Specification

**3. TROUBLE SHOOTING.....12**
3.1 Checking XO Block
3.2 Checking Transceiver DC Power Supply Circuit Block
3.3 Checking DC-DC Block
3.4 ASM(Antenna Switch Module) Block
3.5 GSM RF Part
3.6 WCDMA RF Part
3.7 LTE RF Part
3.8 Power
3.9 Charger
3.10 Audio Block
3.11 Checking LCD Block
3.12 Checking Touch Block
3.13 Checking accelmeter+compass sensor Block
3.14 Checking USB Block
3.15 Checking Main/VT camera Block
3.16 Connectivity RF PART

**4. BLOCK DIAGRAM..... 74**

**5. CIRCUIT DIAGRAM..... 80**

**6. BGA PIN MAP..... 94**

**7. PCB LAYOUT..... 95**

**8. HIDDEN MENU..... 102**

**9. DOWNLOAD..... 105**

**10. CALIBRATION..... 106**

**11. DISASSEMBLE GUIDE..... 107**

**12. EXPLODED VIEW..... 108**

**13. REPLACEMENT PART LIST..... 109**



**Copyright © 2016 LG Electronics. Inc. All right reserved. Only training and service purposes**

## 1.1 Purpose

This manual provides the information necessary to repair, calibration, description and download the features of this model.

## 1.2 Regulatory Information

**A. Security**

This material is prohibited to share and release to unauthorized person, in accordance with the regulations, LG Electronics, Civil / criminal responsibility in accordance with the relevant provisions violate.

**B. Precautions for repair**

- In case of Disassembly or Assembly to repair product, be careful of a product failure caused by RF signals and Static electricity.
- When using Magnetic tool for the Phone's SVC repair, you should check affect the Electric parts according to effect of Magnet.
- When fastening the screw, be careful not to damage the head of screw and even product.

**C. Attention**

**Boards, which contain Electrostatic Sensitive Device (ESD), are indicated by the**

**Following information is ESD handling:**

- Service personal should ground themselves by using a wrist, strap when exchange system board.
- When repair are made to a system board, they should spread the floor with anti-static mat which is also grounded.
- Use a suitable, grounded soldering iron.
- Keep sensitive parts in these protective packages until these are used.
- When returning system board or parts like EEPROM to the Factory, use the protective package as described.



Copyright © 2016 LG Electronics. Inc. All right reserved. Only training and service purposes

## 2.1 Band Specification

| Support Band | TX Freq (MHz) | RX Freq (MHz) |
|---|---|---|
| WCDMA(FDD1) | 1920 – 1980 | 2110 – 2170 |
| WCDMA(FDD5) | 824 – 849 | 869 – 894 |
| WCDMA(FDD8) | 880 – 915 | 925 – 960 |
| EGSM | 880 – 915 | 925 – 960 |
| GSM850 | 824 – 849 | 869 – 894 |
| DCS1800 | 1710 – 1785 | 1805 – 1880 |
| PCS1900 | 1850 – 1910 | 1930 – 1990 |
| LTE3 | 1710 – 1785 | 1805 – 1880 |
| LTE7 | 2500 – 2570 | 2620 – 2690 |
| LTE28 | 703 – 748 | 758 - 803 |



Copyright © 2016 LG Electronics. Inc. All right reserved. Only training and service purposes

## 2.2 HW Features

| List | Type / Spec. | |
|---|---|---|
| 1. Phone Type | DOP Type | |
| 2. Size | 144.7mm x 71.5mm x 8.7mm | |
| 3. Weight | 140 g ( with Battery ) | |
| 4. Battery | **2,125mAh(Typ) (Li-Ion)**, 2,045mAh(Min.) | |
| 5.Chipset | MT6735 1.3GHz Quad core | |
| 6. Memory | 16GB(EMMC) + 1,024MB(LPDDR3) External Memory(SD Card) : Up to 32GB | |
| 7. LCD | Size | 5 inch |
| | Display Type | Active matrix TFT, Transmissive Type |
| | Color | 16.7M colors |
| | Resolution | 1280(H) X 720(V), 294ppi |
| 8. Touch | Type | 5 inch Capacitive type/ In-cell |
| 9. Main Camera (5M) | Type | CMOS image sensor |
| | Resolution | 2592(H) X 1944(V) pixels. |
| | Image Scaling Down | 5M(2560x1920), W4M(2560x1536)),<br>3M(1920x1920), 1M(1280x960) |
| | Format | **Image :** JPG, **Video :** MP4 |



Copyright © 2016 LG Electronics. Inc. All right reserved. Only training and service purposes

## 2.2 HW Features

| | | |
|---|---|---|
| 10. Audio | Receiver | 12 X 06 X 2.5T Receiver |
| | Speaker | 16 X 12 X 2.6T Speaker |
| | Format | MP3, AAC, MIDI, EAAC+, OGG, AMR |
| 11. Bluetooth | Standard | Bluetooth 4.2 |
| | Effective Distance | 10M |
| | Distance | 0 m ~ 10 m (depend on environment) |
| 12. WLAN | Standard | IEEE 802.11 b/g/n |
| | Throughput | Max 40Mbps (SDIO Driver performance) |
| | Depend on environment | 0 ~ 50m (depend on environment) |
| 13. GPS | type | A-GPS, GLONASS |
| 14. FM | type | FM Radio, 3.5pi Ear-jack |



Copyright © 2016 LG Electronics. Inc. All right reserved. Only training and service purposes

## 2.3 RSSI Display

| RSSI BAR | GSM RSSI | WCDMA RSSI | LTE RSSI | Comment |
|---|---|---|---|---|
| BAR 5->4 | - 90dBm± 3dB | - 84dBm± 4dB | -85dBm ± 4dB | 1. Call Connected & CPIPH Level=-3.3 |
| BAR 4->3 | - 95dBm± 3dB | - 89dBm± 4dB | -95dBm ± 4dB | |
| BAR 3->2 | - 98dBm± 3dB | - 95dBm± 4dB | -105dBm ± 4dB | |
| BAR 2->1 | - 102dBm± 3dB | - 99dBm± 4dB | -115dBm ± 4dB | |
| BAR 1->0 | - 104dBm± 3dB | - 105dBm± 4dB | -128dBm ± 4dB | |

## 2.4 Current consumption

| | Specification | | |
|---|---|---|---|
| | GSM | WCDMA | LTE |
| 1. Sleep Mode (Sleep & Idle Avg) | 8mA↓@ P.P 5 | 8mA↓@ DRX 7 | 8mA↓@ 2.56s |
| 2. Standby (With Earjack) | 10mA↓@ P.P 5 | 10mA↓@ DRX 7 | 10mA↓@ 2.56s |
| 3. Standby (BT Connected) | 10mA↓ | 10mA↓ | 10mA↓ |
| 4. Talk Mode | -GSM LVL0 : 400mA↓@ Avg | -Max Pwr : 650mA↓@Avg<br>-Tx 10dBm : 260 mA↓@ Avg | -Max Pwr(LCD Off) 850mA↓@Avg<br>-Tx 10dBm(LCD Off) 400mA↓@ Avg |
| 5. No SVC Mode | 200mA↓ | 200mA↓ | 200mA↓ |
| 6. Power Off Mode | 1mA↓ | 1mA↓ | 1mA↓ |



Copyright © 2016 LG Electronics. Inc. All right reserved. Only training and service purposes

### 2.5 Battery bar

| Battery Bar | Specification | Battery Bar | Specification |
|---|---|---|---|
| Bar 20(Full) | Over 98% | Bar 9 -> Bar 8 | 43% -> 42% |
| Bar 20 -> Bar 19 | 98% -> 97% | Bar 8 -> Bar 7 | 38% -> 37% |
| Bar 19 -> Bar 18 | 93% -> 92% | Bar 7 -> Bar 6 | 33% -> 32% |
| Bar 18 -> Bar 17 | 88% -> 87% | Bar 6 -> Bar 5 | 28% -> 27% |
| Bar 17 -> Bar 16 | 83% -> 82% | Bar 5 -> Bar 4 | 23% -> 22% |
| Bar 16 -> Bar 15 | 78% -> 77% | Bar 4 -> Bar 3 | 16% -> 15% |
| Bar 15 -> Bar 14 | 73% -> 72% | Bar 3 -> Bar 2 | 13% -> 12% |
| Bar 14 -> Bar 13 | 68% -> 67% | Bar 2 -> Bar 1 | 8% -> 7% |
| Bar 13 -> Bar 12 | 63% -> 62% | Bar 1 -> Bar 0 | 3% -> 2% |
| Bar 12 -> Bar 11 | 58% -> 57% | Power off | 2% ->1% |
| Bar 11 -> Bar 10 | 53% -> 52% | Low battery pop-up | 15% , 5% |
| Bar 10 -> Bar 9 | 48% -> 47% | | |

※Cut Off Voltage : 3.45 ± 0.1 V



Copyright © 2016 LG Electronics. Inc. All right reserved. Only training and service purposes

## 2.6 SW Specification

| Item | Feature | Comment |
|---|---|---|
| RSSI | 0 ~ 5 Levels | |
| Battery Charging | 0 ~ 20 Levels | |
| Key Volume | 0 ~ 7 Level | |
| Audio Volume | 0 ~ 15 Level | |
| Time / Date Display | Yes | |
| Multi-Language | Yes | depending on build language |
| Quick Access Mode | Phone / Messaging / QuickMemo/ Gallery / Camera | |
| PC Sync | Yes | LG Bridge |
| Speed Dial | Yes | Voice mail center -> 1 key |
| Profile | Yes | not same with feature phone setti ng |
| CLIP / CLIR | Yes | |
| Phone Book | Name / Number / Email / Groups / Post al addresses / Organizations / IM / Note / Nickname / Website / Event / | There is no limitation on the num ber of items. It depends on available memory a mount. |
| Last Dial Number | Yes | |
| Last Received Number | Yes | |
| Last Missed Number | Yes | |
| Search by Number/Name | Yes | |
| Group | Yes | There is no limitation on the num ber of items. It depends on available memory a mount. |
| Fixed Dial Number | Yes | |
| Service Dial Number | No | |
| Own Number | Yes | My Profile (add/edit/delete are su pported) |



Copyright © 2016 LG Electronics. Inc. All right reserved. Only training and service purposes

## 2.6 SW Specification

| | | |
|---|---|---|
| Voice Memo | Yes | Support voice recorder |
| Call Reminder | No | |
| Network Selection | Automatic | |
| Mute | Yes | |
| Call Divert | Yes | |
| Call Barring | Yes | |
| Call Charge (AoC) | No | |
| Call Duration | Yes | |
| SMS (EMS) | There is no limitation on the number of items.<br>It depends on available memory amount. | EMS does not support. |
| SMS Over GPRS | Yes | |
| EMS Melody / Picture Send / Receive / Save | No | |
| MMS MPEG4 Send / Receive / Save | Yes | ➢ **Send / Receive** : Yes<br>➢ **Save** : depends on content type<br>Support video content type list<br>1. video/mp4<br>2. video/h263<br>3. video/3gpp2<br>video/3gpp |
| Long Message | MAX 2000 characters | The standard of Open vender |
| Cell Broadcast | Yes | CB app supports Cell Broadcast message |
| Download | Over the Web | |
| Game | No | |
| Calendar | Yes | |
| Memo | Yes | There is no limitation on the number of items.<br>It depends on available memory amount. |
| World Clock | Yes | |



Copyright © 2016 LG Electronics. Inc. All right reserved. Only training and service purposes

## 2.6 SW Specification

| | | |
|---|---|---|
| Unit Convert | No | |
| Stop Watch | Yes | |
| Wall Paper | Yes | |
| WAP Browser | No | WAP stack and wml are not supporte d. |
| Download Melody / Wallpaper | Yes | Ringtone and wallpaper can be down loaded in LG SmartWorld app. |
| SIM Lock | No | |
| SIM Toolkit | Yes | |
| MMS | Yes | Google MMS Client |
| EONS | Yes | |
| CPHS | Yes | V4.2 |
| ENS | No | |
| Camera | Yes | 8M AF /<br>Digital Zoom : x4 |
| JAVA | No | |
| Voice Dial | No | US English only |
| IrDa | No | IrRC |
| Bluetooth | Yes | Ver. 4.2 |
| FM radio | Yes | |
| GPRS | Yes | Class 12 |
| EDGE | Yes | Class 12(Rx only) |
| Hold / Retrieve | Yes | |
| Conference Call | Yes | Max. 6 |
| DTMF | Yes | |
| Memo pad | No | |
| TTY | No | |
| AMR | Yes | |
| SyncML | No | |
| IM | Yes | Google Hangout |
| Email | Yes | |



Copyright © 2016 LG Electronics. Inc. All right reserved. Only training and service purposes

## 3.1 Checking XO Block

**The out put frequency(26MHz) of VTCXO(X5001) is used as the reference one of MT6169**

**Checking Flow**

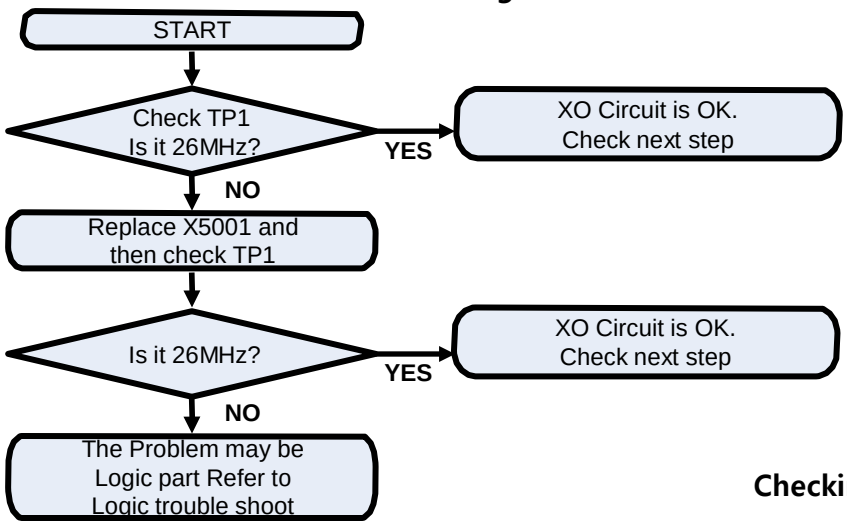


**Image**

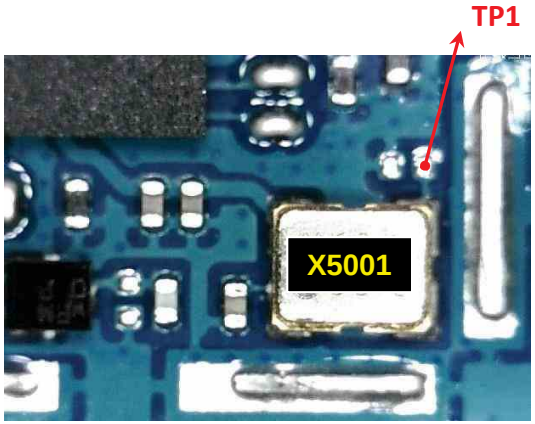


**Checking Flow**

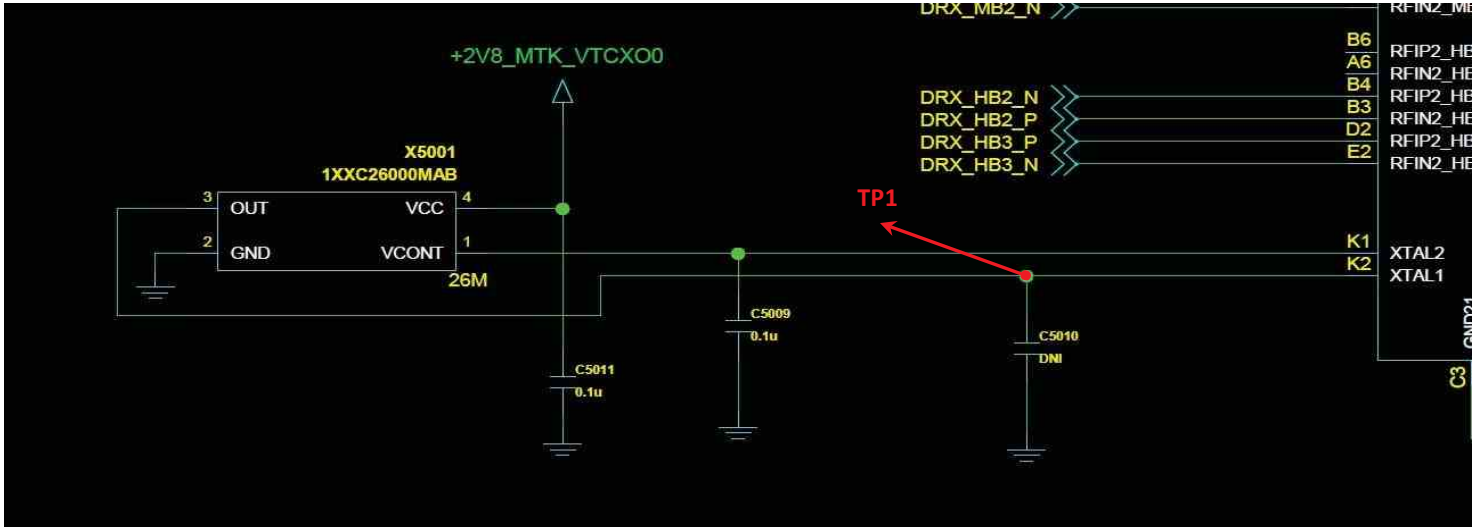




Copyright © 2016 LG Electronics. Inc. All right reserved. Only training and service purposes

## 3.2 Checking Transceiver DC Power Supply Circuit Block

**The MT6169 operating voltages used two voltage sources 1.8V and 2.8V**

### Checking Flow

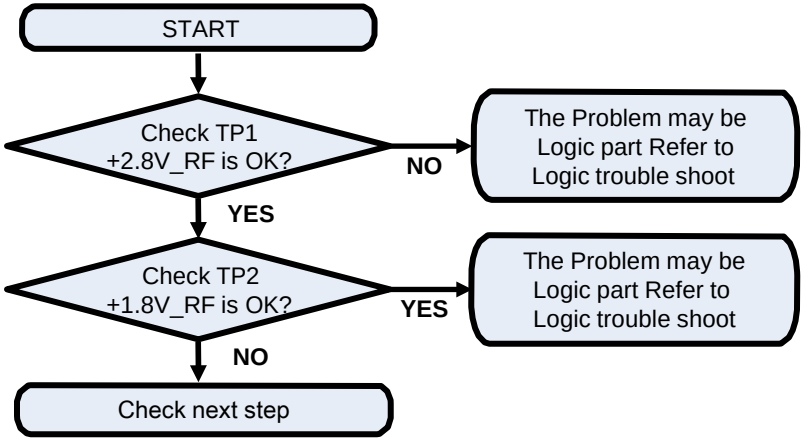


### Image

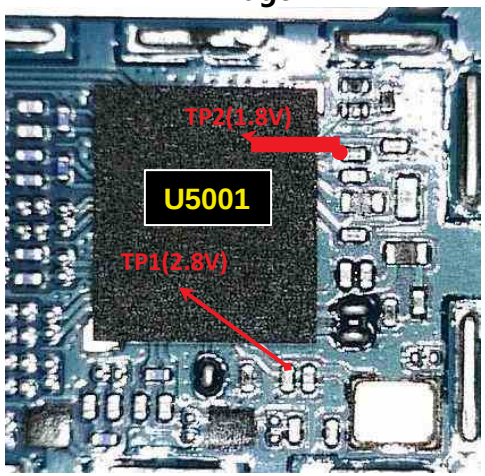


### Circuit Diagram

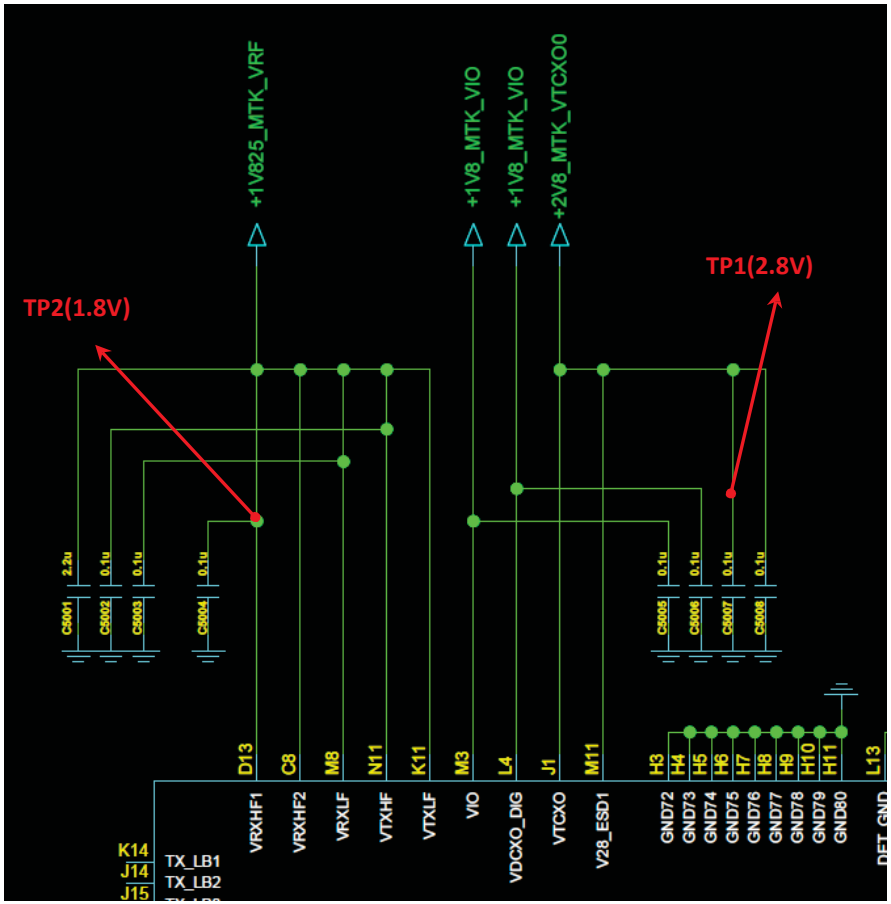




Copyright © 2016 LG Electronics. Inc. All right reserved. Only training and service purposes

## 3.3 Checking DC-DC Block

**The DC-DC(MT6328, U4100) output voltages is used as the reference one of SKY77643-31**

**Checking Flow**

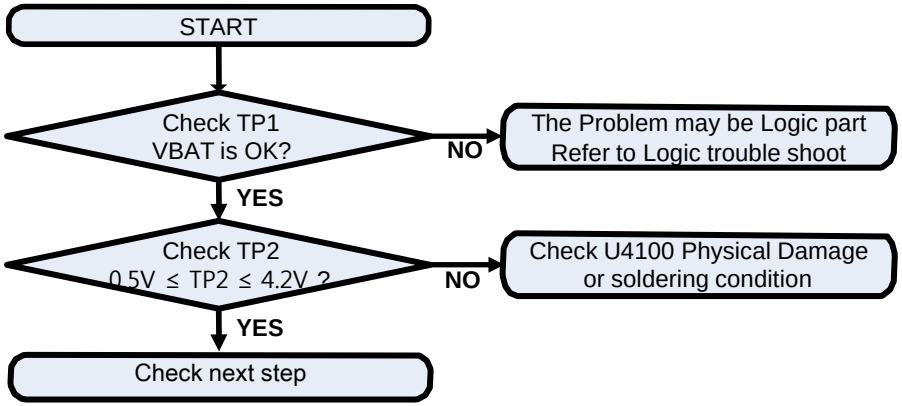


**Image**

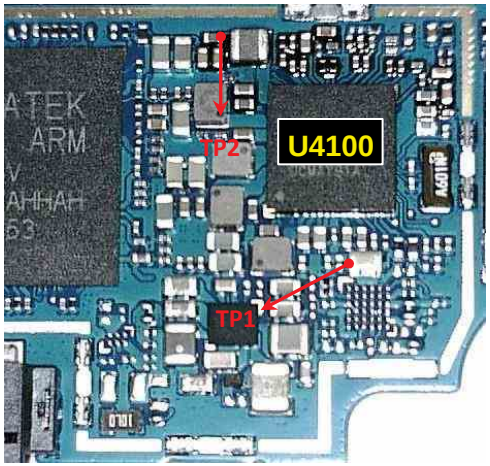


**Circuit Diagram**

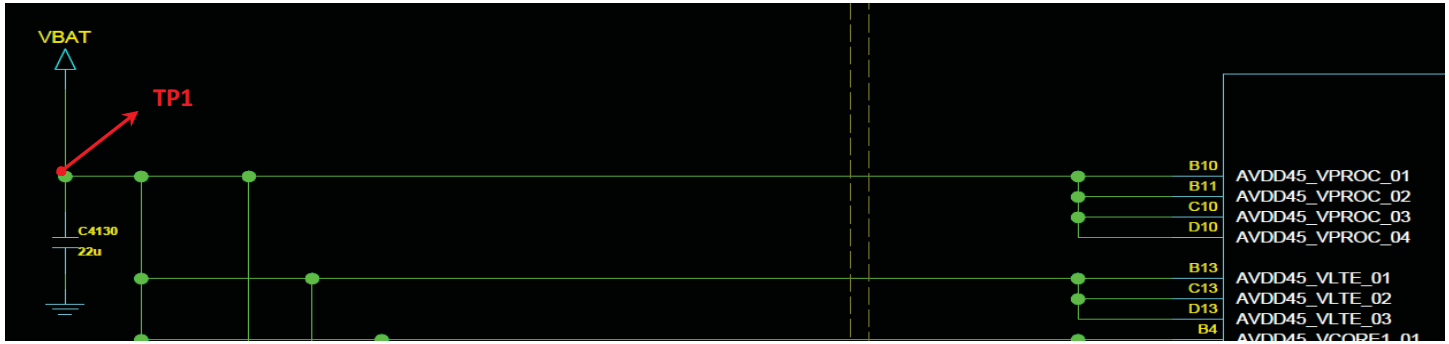


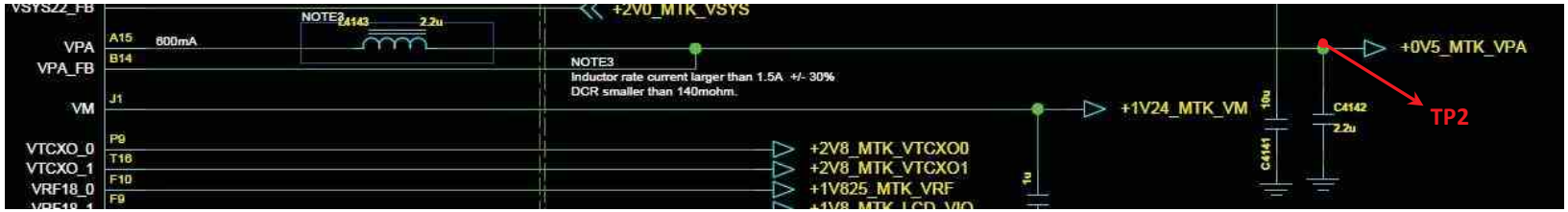



Copyright © 2016 LG Electronics. Inc. All right reserved. Only training and service purposes

## 3.4 ASM(Antenna Switch Module) Block

### 3.4.1 Checking ANT #1 ASM (GSM 850/900, W B5/8, LTE B7/28)

**Checking Flow**

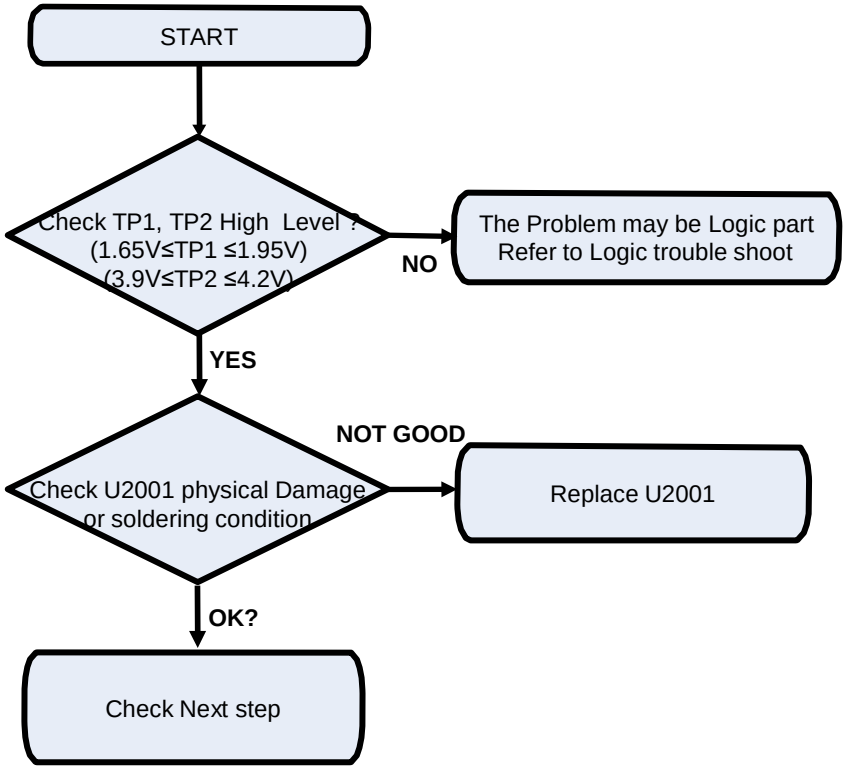


**Image**

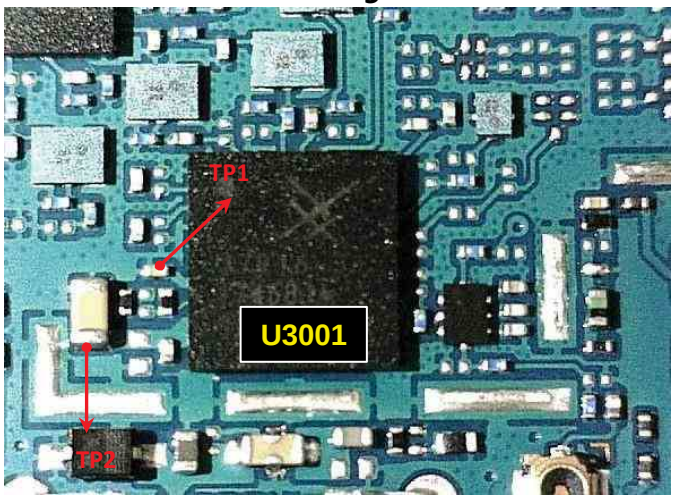


**Circuit Diagram**

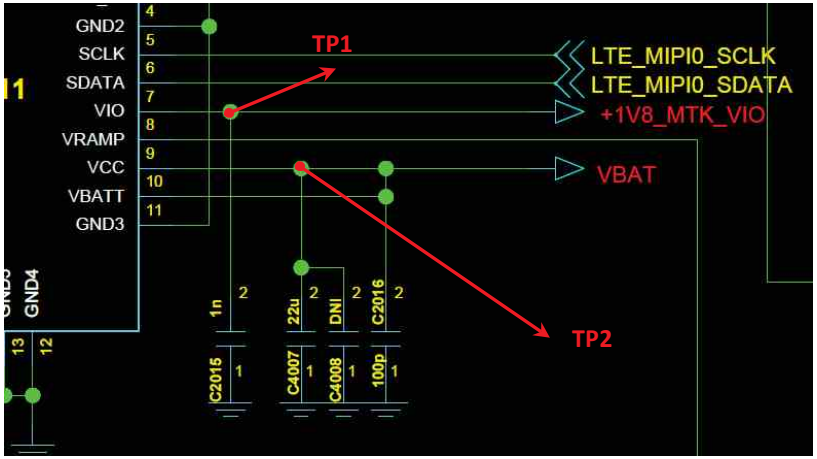




Copyright © 2016 LG Electronics. Inc. All right reserved. Only training and service purposes

## 3.4 ASM(Antenna Switch Module) Block

### 3.4.2 Checking ANT #2 ASM (GSM 1800/1900, W B1 B2, LTE B3)

**Checking Flow**

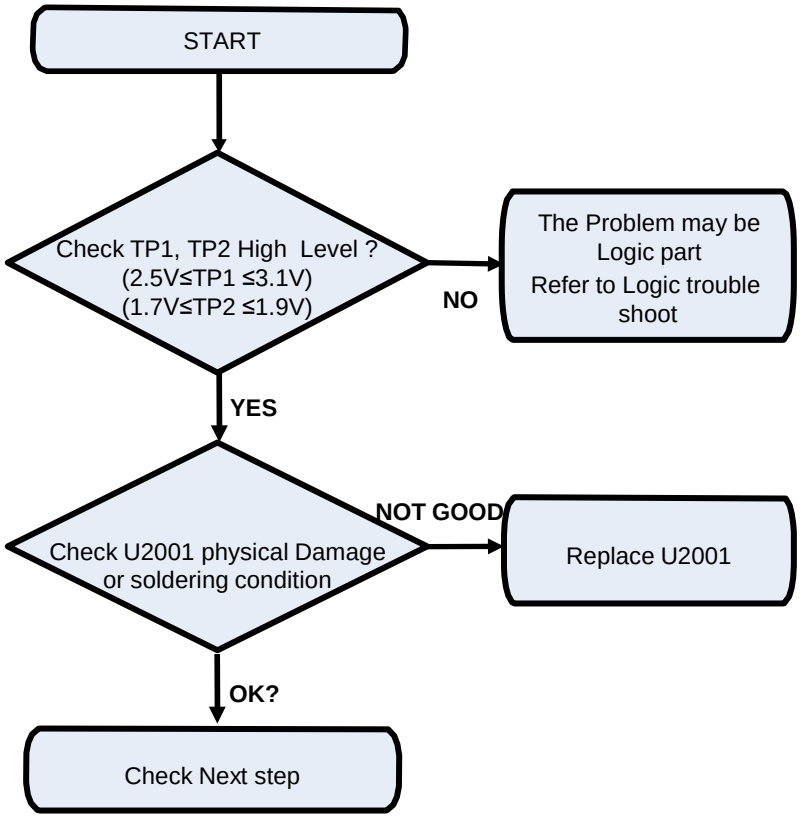


**Image**

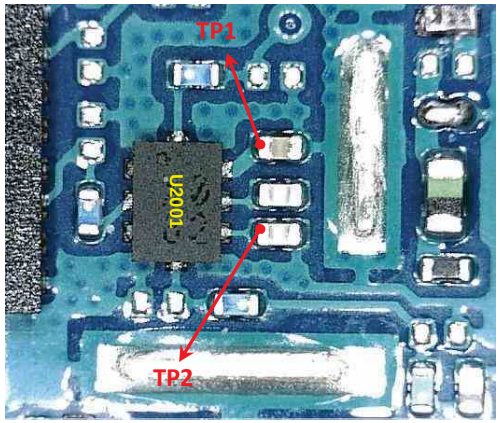


**Circuit Diagram**

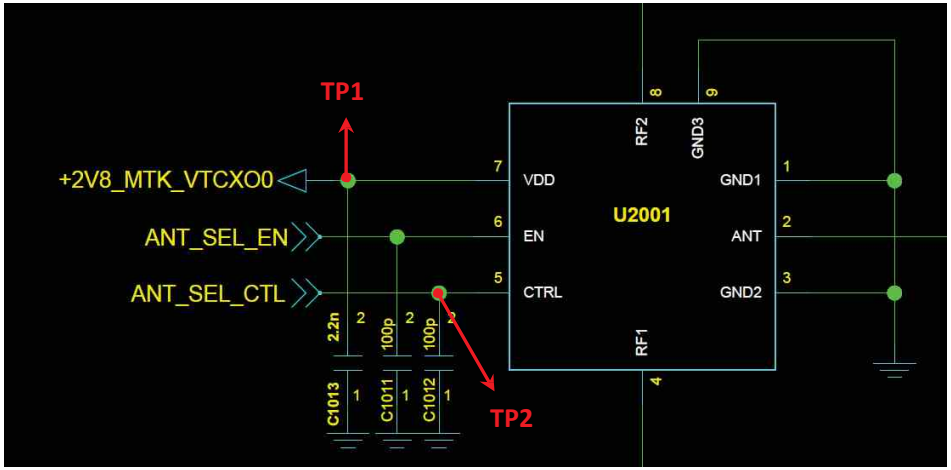




Copyright © 2016 LG Electronics. Inc. All right reserved. Only training and service purposes

### 3.5 GSM RF PART

**GSM RF Part support GSM850/900/1800/1900 with ASM, PAM, Transceiver component**

**Checking Flow**

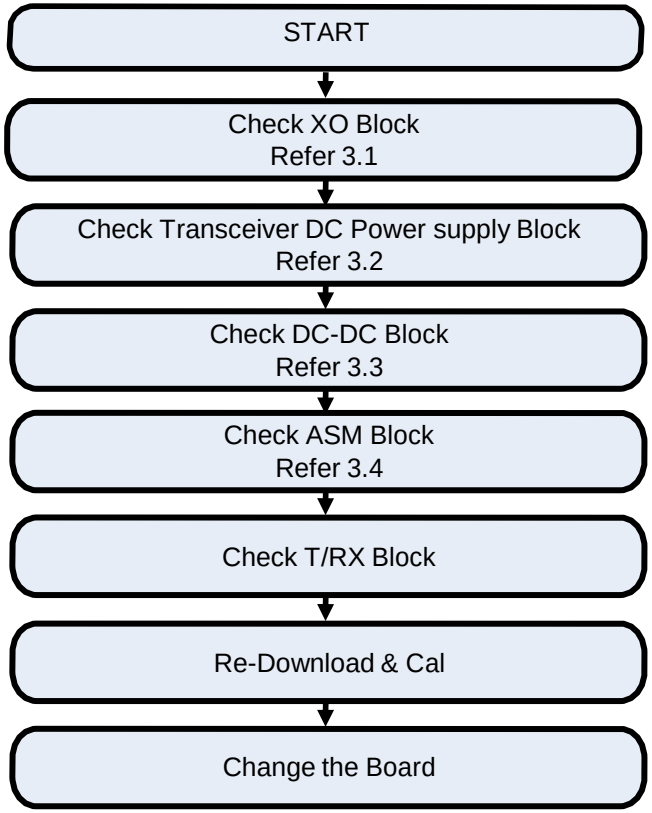




Copyright © 2016 LG Electronics. Inc. All right reserved. Only training and service purposes

## 3.5 GSM RF PART

### 3.5.1 GSM RF Part RX RF PATH

GSM850 RX PATH
GSM900 RX PATH
GSM1800 RX PATH
GSM1900 RX PATH

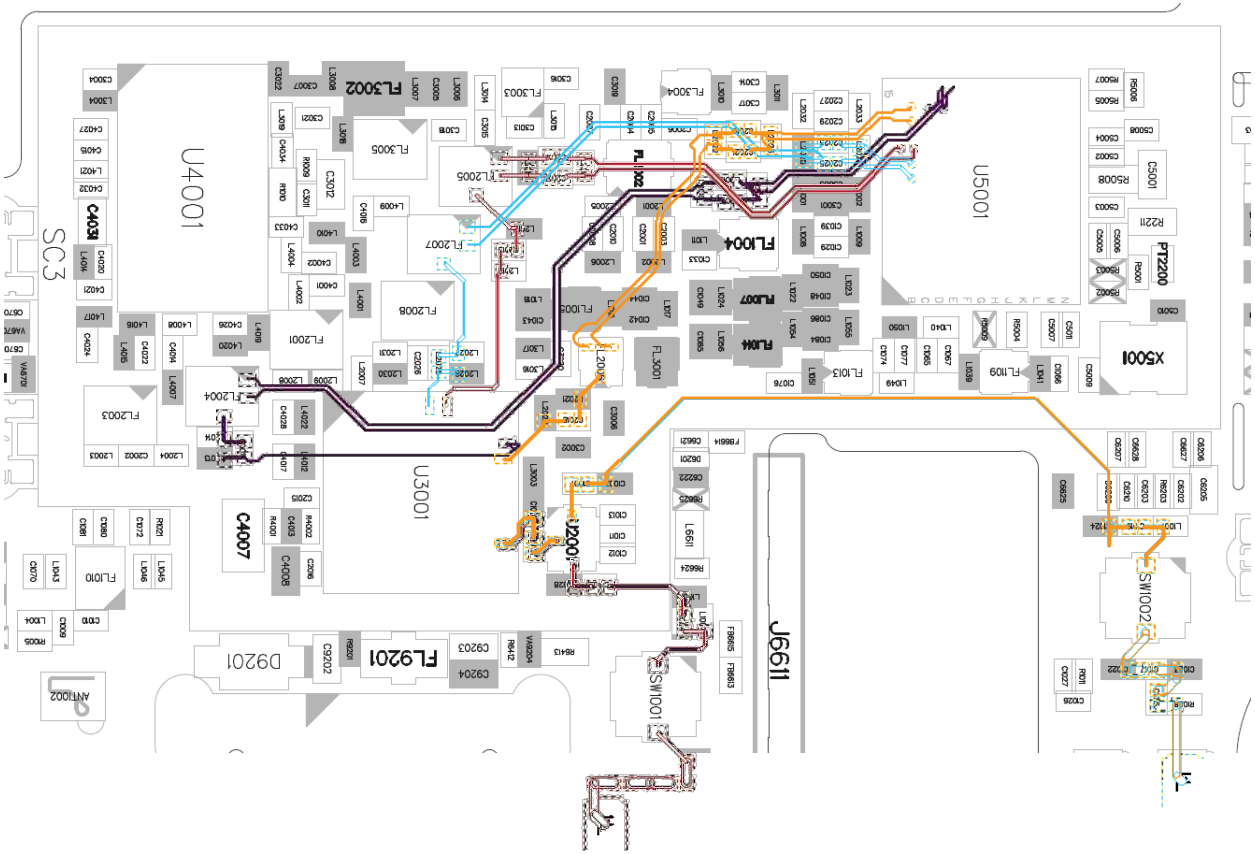




Copyright © 2016 LG Electronics. Inc. All right reserved. Only training and service purposes

## 3.5 GSM RF PART

### 3.5.2 Checking RF Signal RX path(SW, GSM850/900)

**Checking Flow**

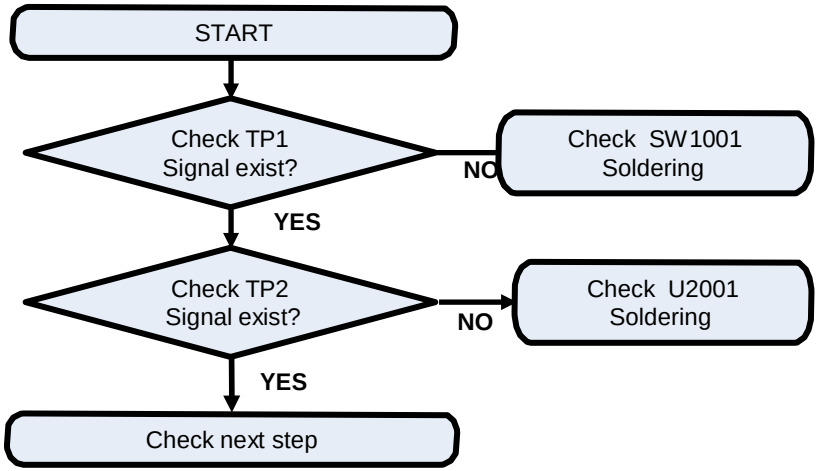


**Image**

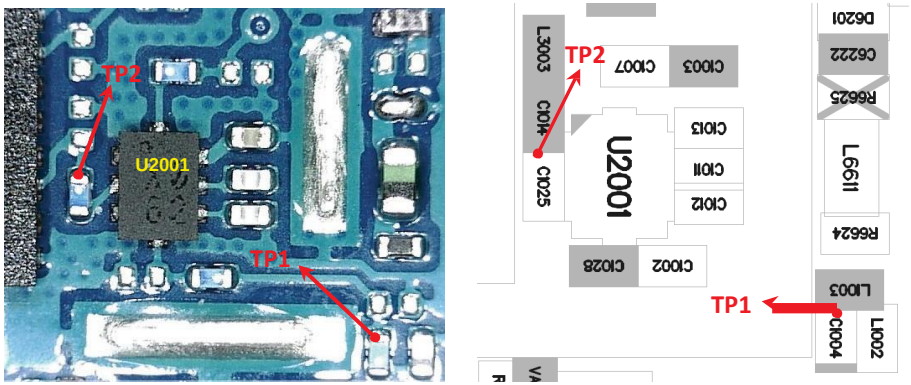


**Circuit Diagram**

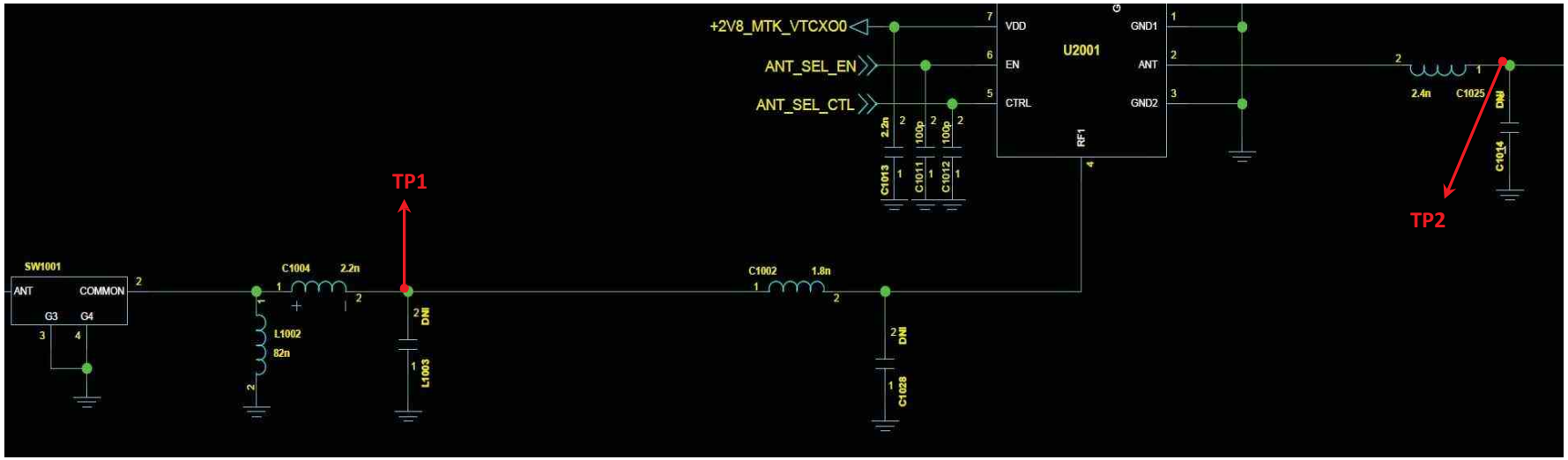




Copyright © 2016 LG Electronics. Inc. All right reserved. Only training and service purposes

## 3.5 GSM RF PART

### 3.5.3 Checking RF Signal RX path(GSM850/900)

**Checking Flow**

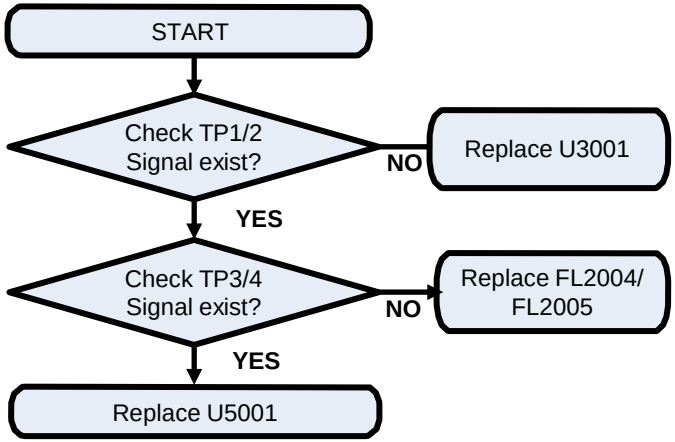


**Image**

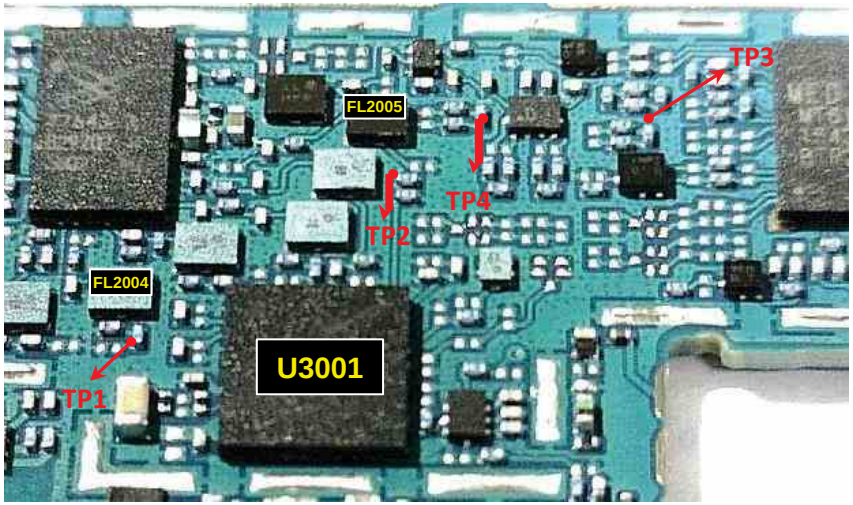


**Circuit Diagram**

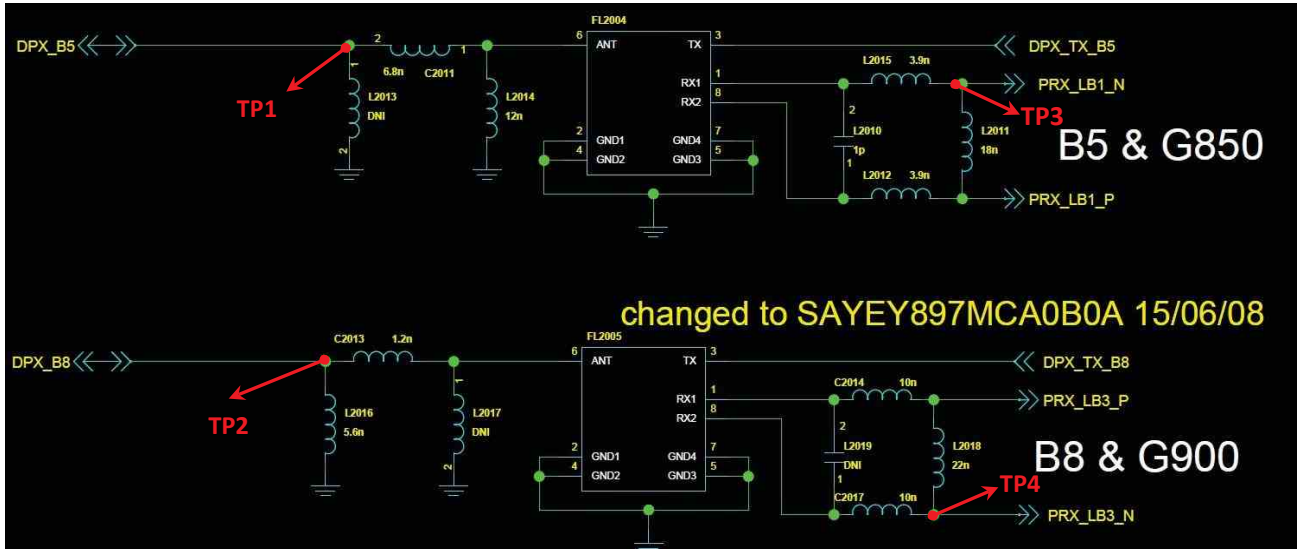



Copyright © 2016 LG Electronics. Inc. All right reserved. Only training and service purposes

## 3.5 GSM RF PART

### 3.5.4 Checking RF Signal RX path(GSM1800/1900)

**Checking Flow**

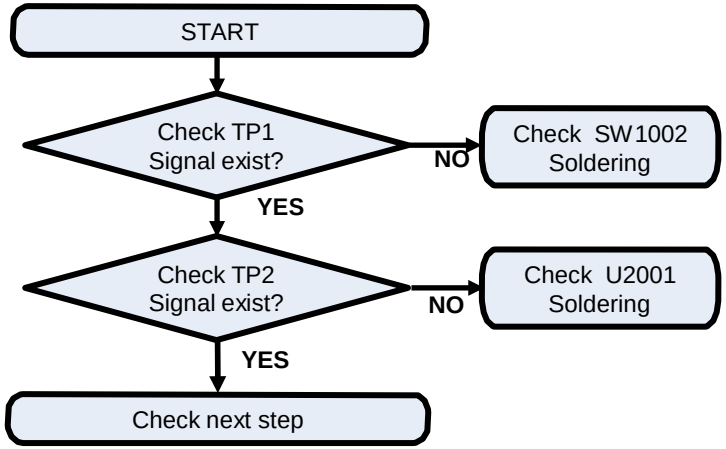


**Image**

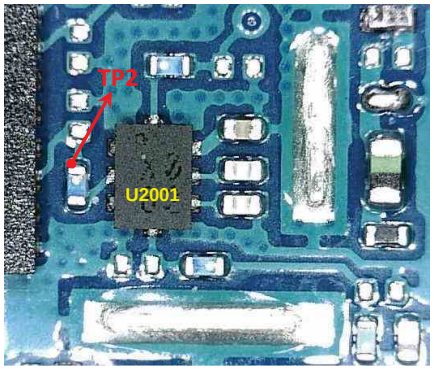


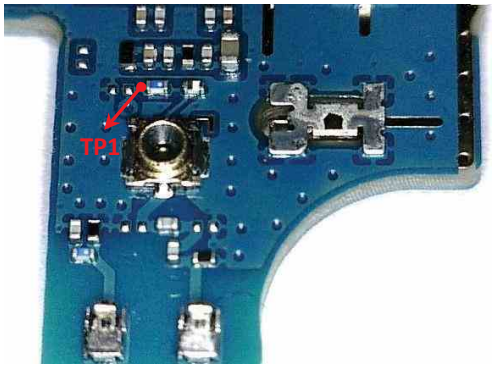


**Circuit Diagram**

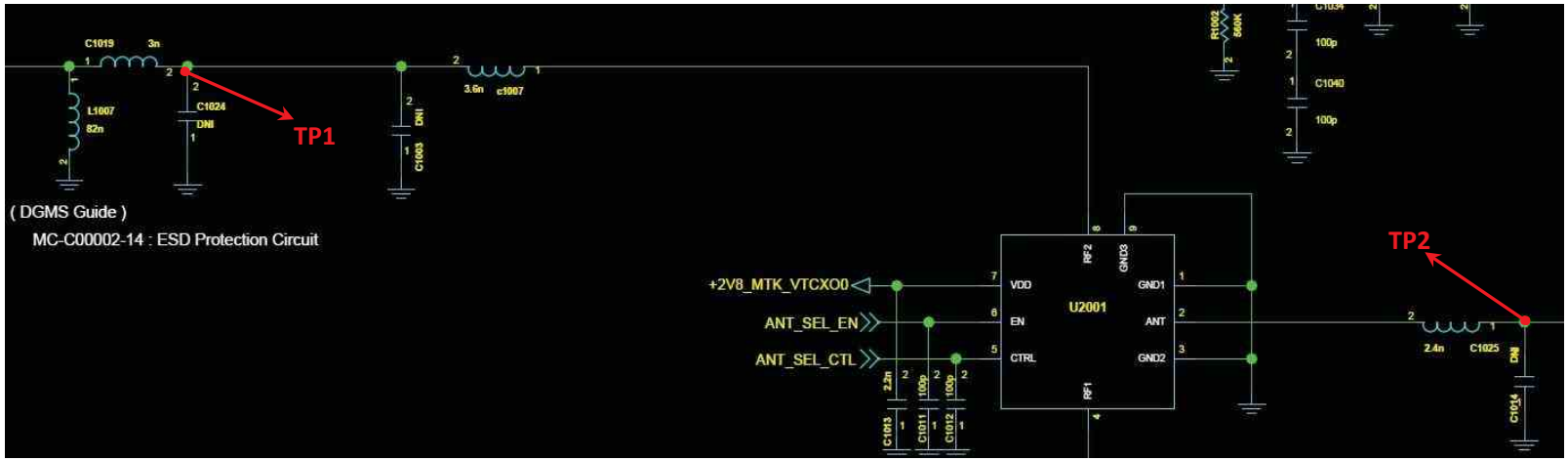




Copyright © 2016 LG Electronics. Inc. All right reserved. Only training and service purposes

## 3.5 GSM RF PART

### 3.5.5 Checking RF Signal RX path(GSM1800/1900)

**Checking Flow**

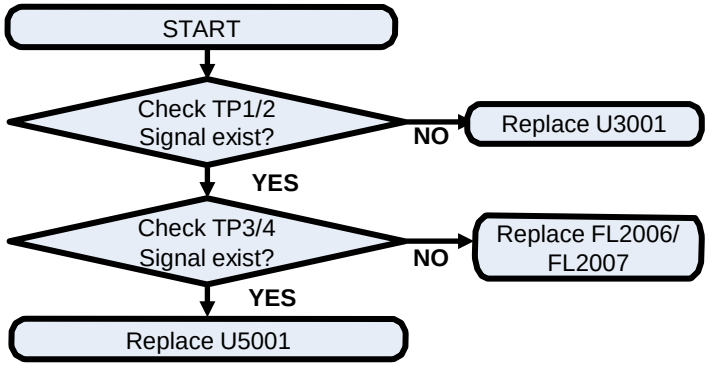


**Image**

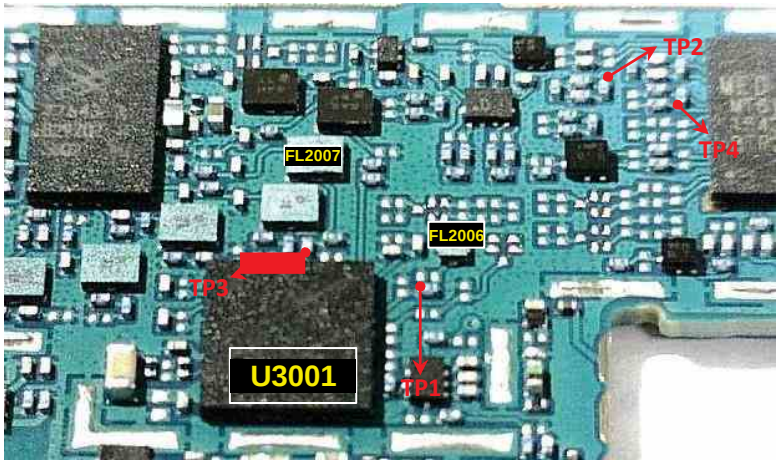


**Circuit Diagram**

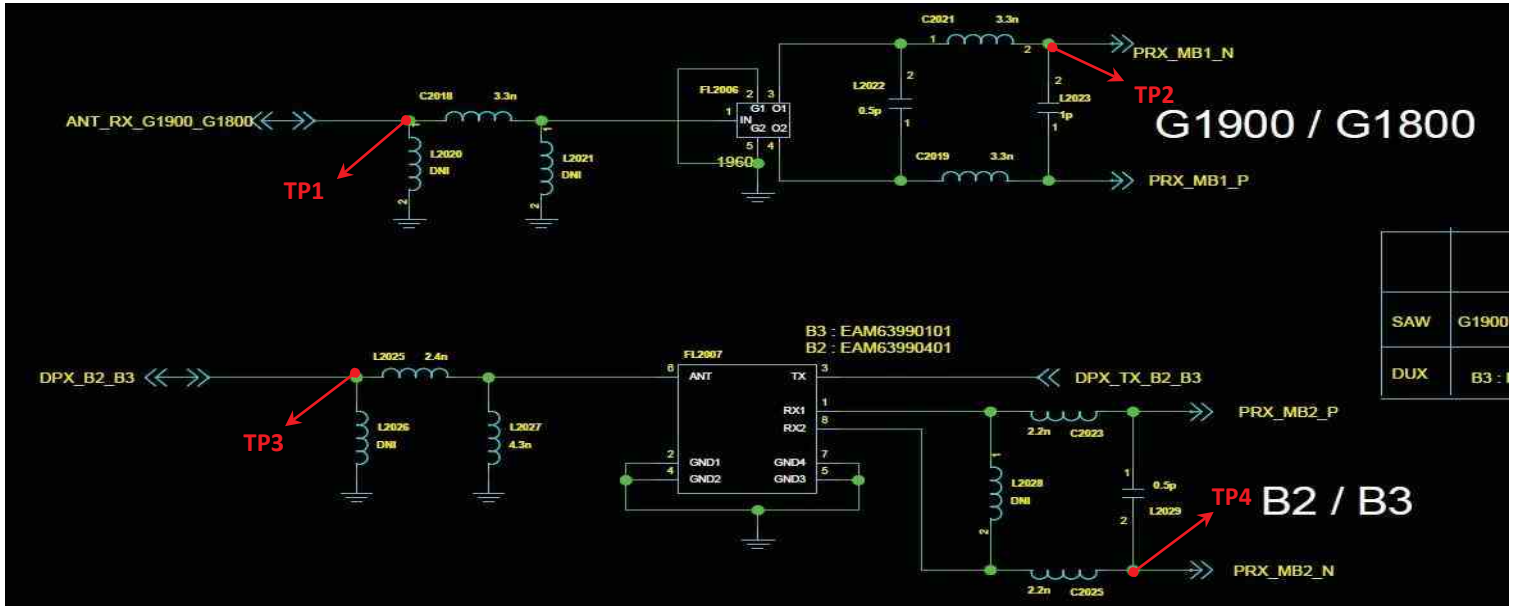



Copyright © 2016 LG Electronics. Inc. All right reserved. Only training and service purposes

## 3.5 GSM RF PART

### 3.5.6 GSM RF Part TX RF PATH

GSM850 TX PATH
GSM900 TX PATH
GSM1800 TX PATH
GSM1900 TX PATH

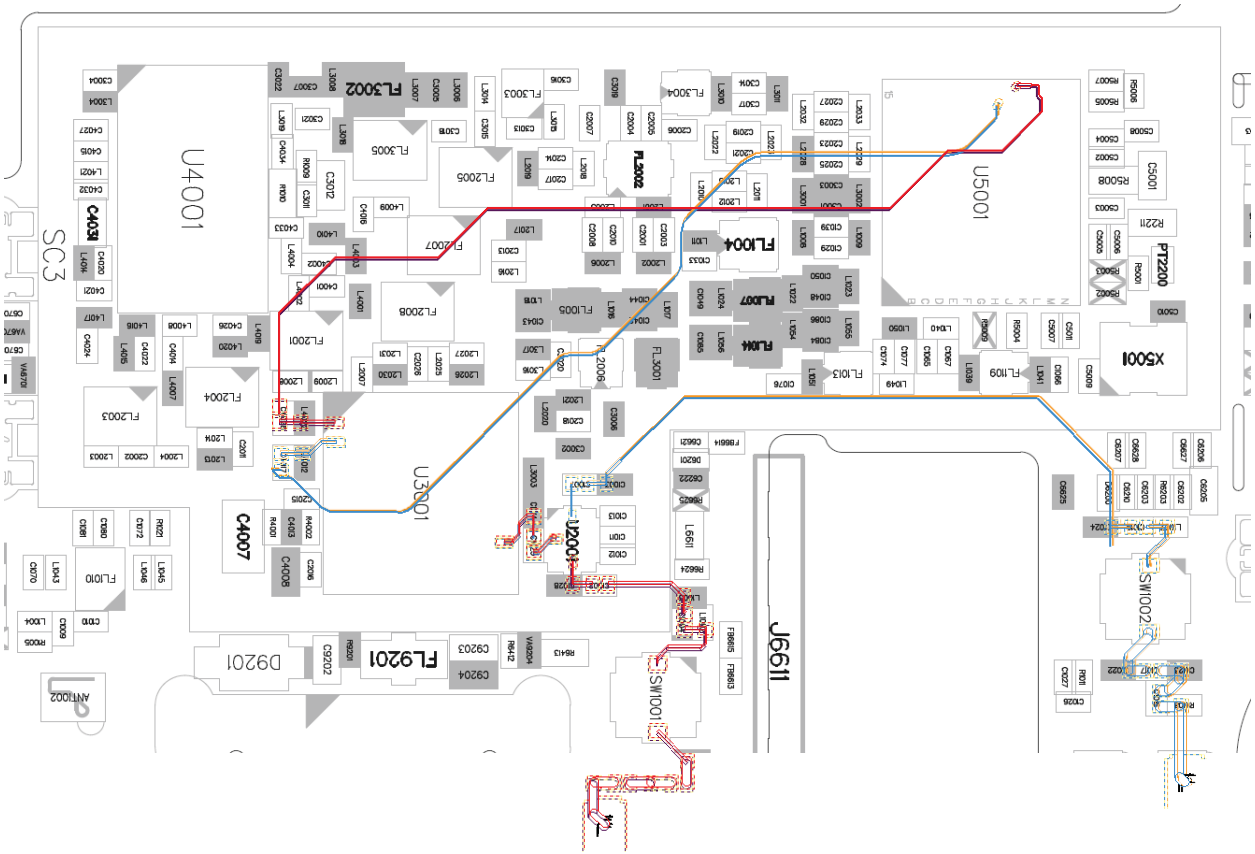




Copyright © 2016 LG Electronics. Inc. All right reserved. Only training and service purposes

## 3.5 GSM RF PART

### 3.5.7 Checking GSM PAM DC Power Circuit

**Checking Flow**

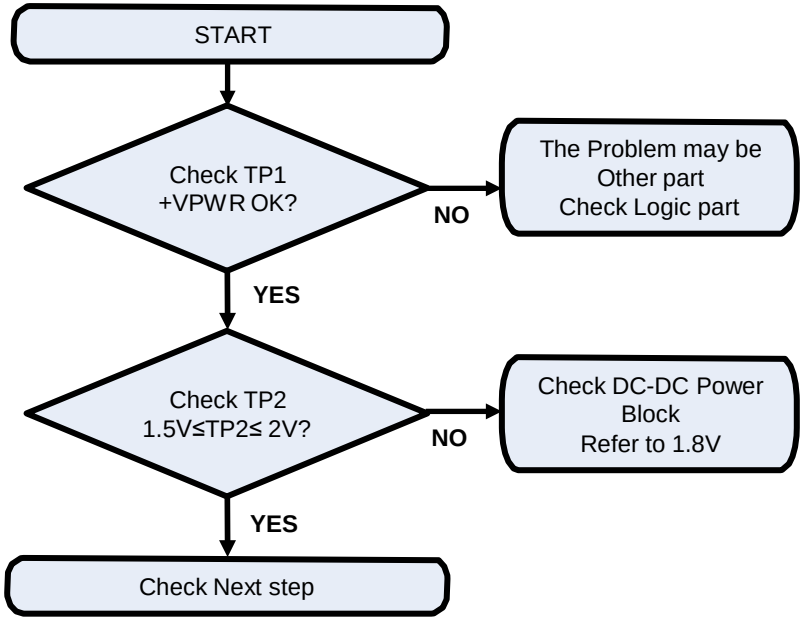


**Image**

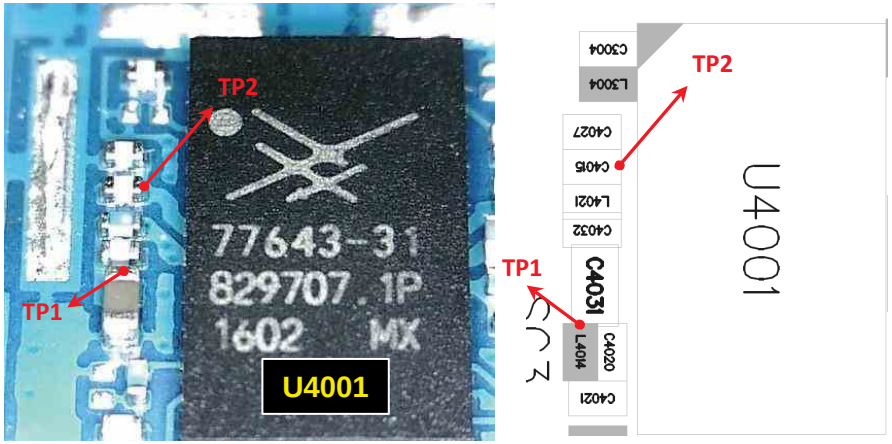


**Circuit Diagram**

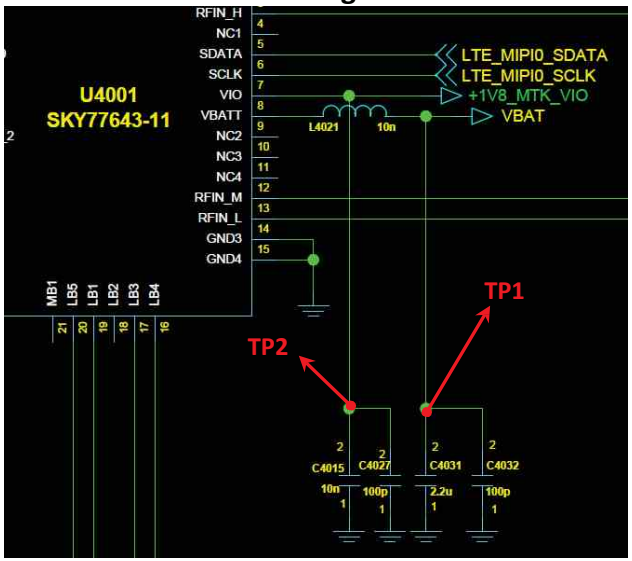




Copyright © 2016 LG Electronics. Inc. All right reserved. Only training and service purposes

## 3.5 GSM RF PART
### 3.5.8 Checking RF Signal TX path(GSM850/900)

**Checking Flow**

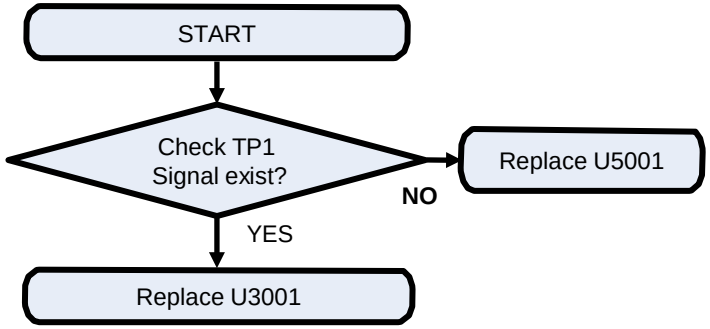


**Image**

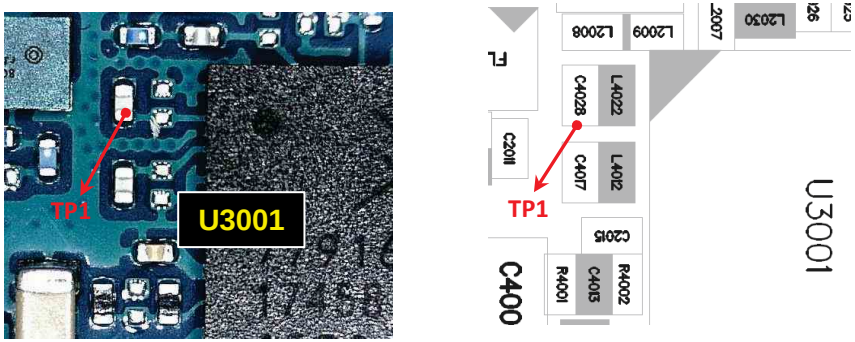


**Circuit Diagram**

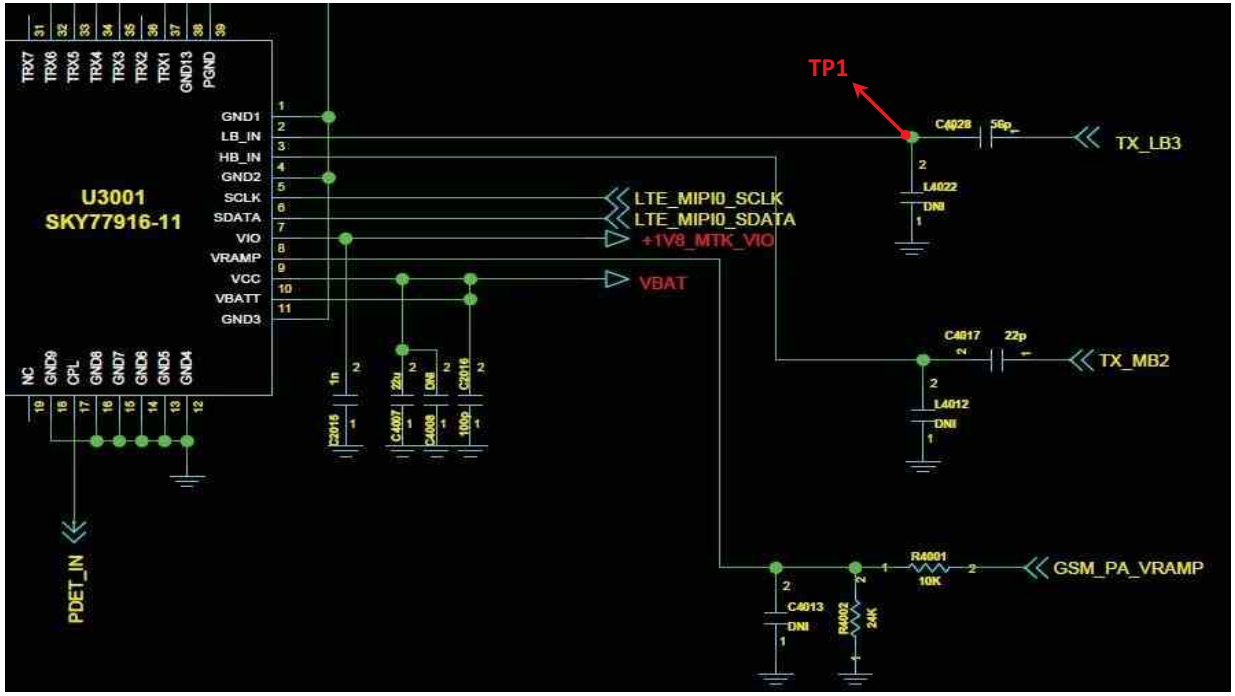



Copyright © 2016 LG Electronics. Inc. All right reserved. Only training and service purposes

## 3.5 GSM RF PART

### 3.5.9 Checking RF Signal TX path(GSM1800/1900)

**Checking Flow**

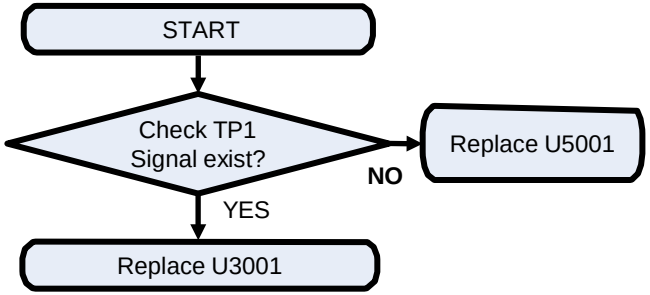


**Image**

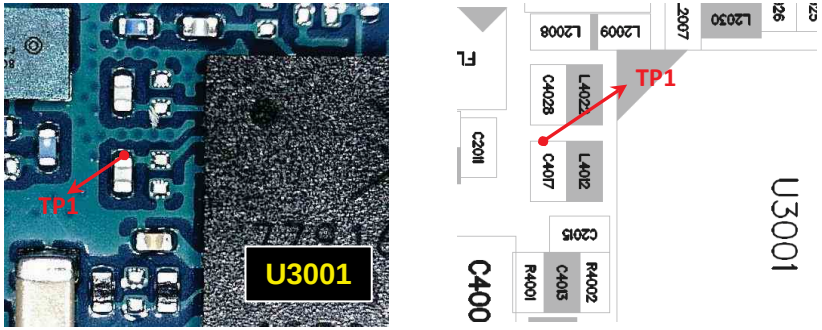


**Circuit Diagram**

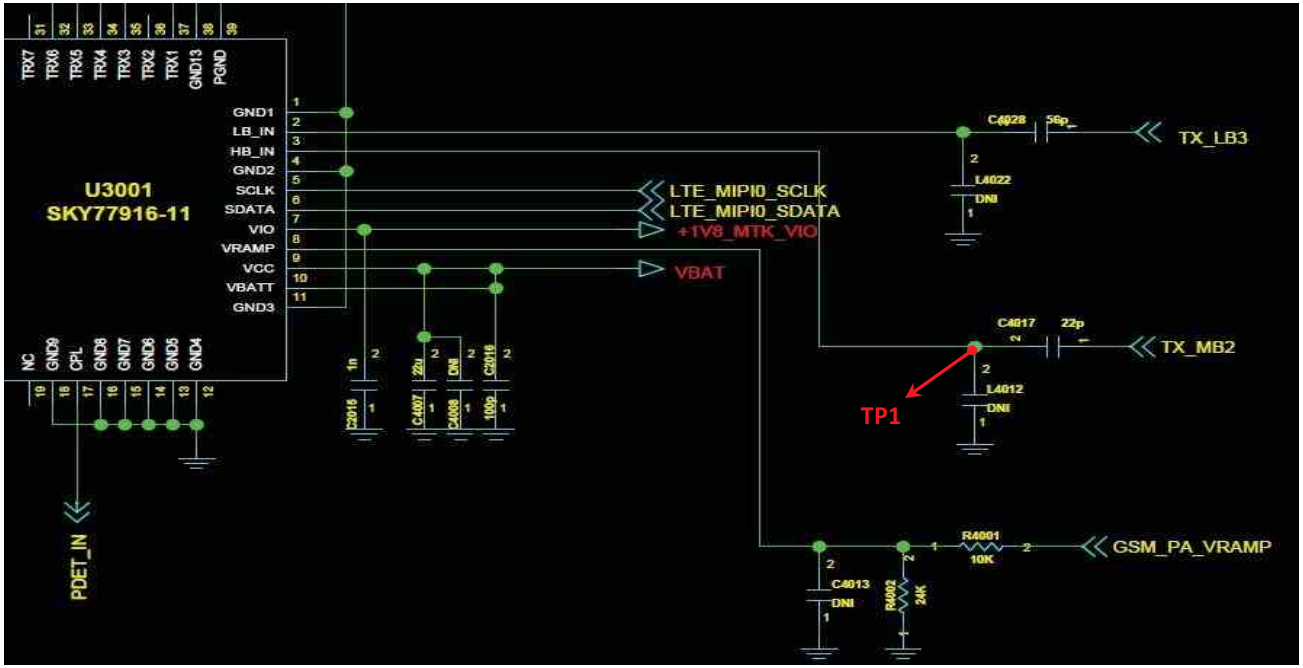



Copyright © 2016 LG Electronics. Inc. All right reserved. Only training and service purposes

## 3.6 WCDMA RF PART

**WCDMA RF Part support WCDMA B1/2/5/8 with ASM, PAM, Transceiver component**

**Checking Flow**

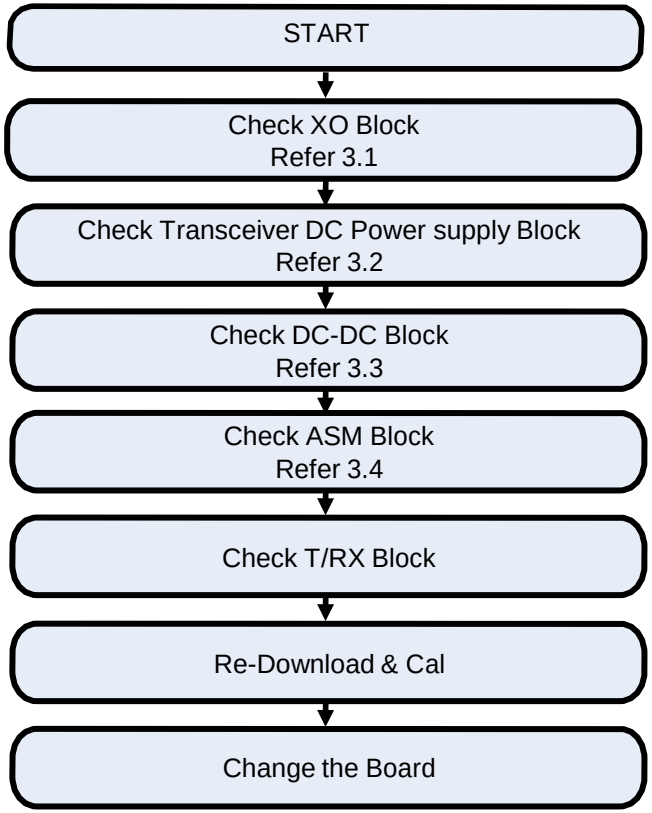




Copyright © 2016 LG Electronics. Inc. All right reserved. Only training and service purposes

## 3.6 WCDMA RF PART

### 3.6.1 WCDMA RF Part RX RF PATH

WCDMA B5 RX PATH
WCDMA B8 RX PATH
WCDMA B1 RX PATH
WCDMA B2 RX PATH

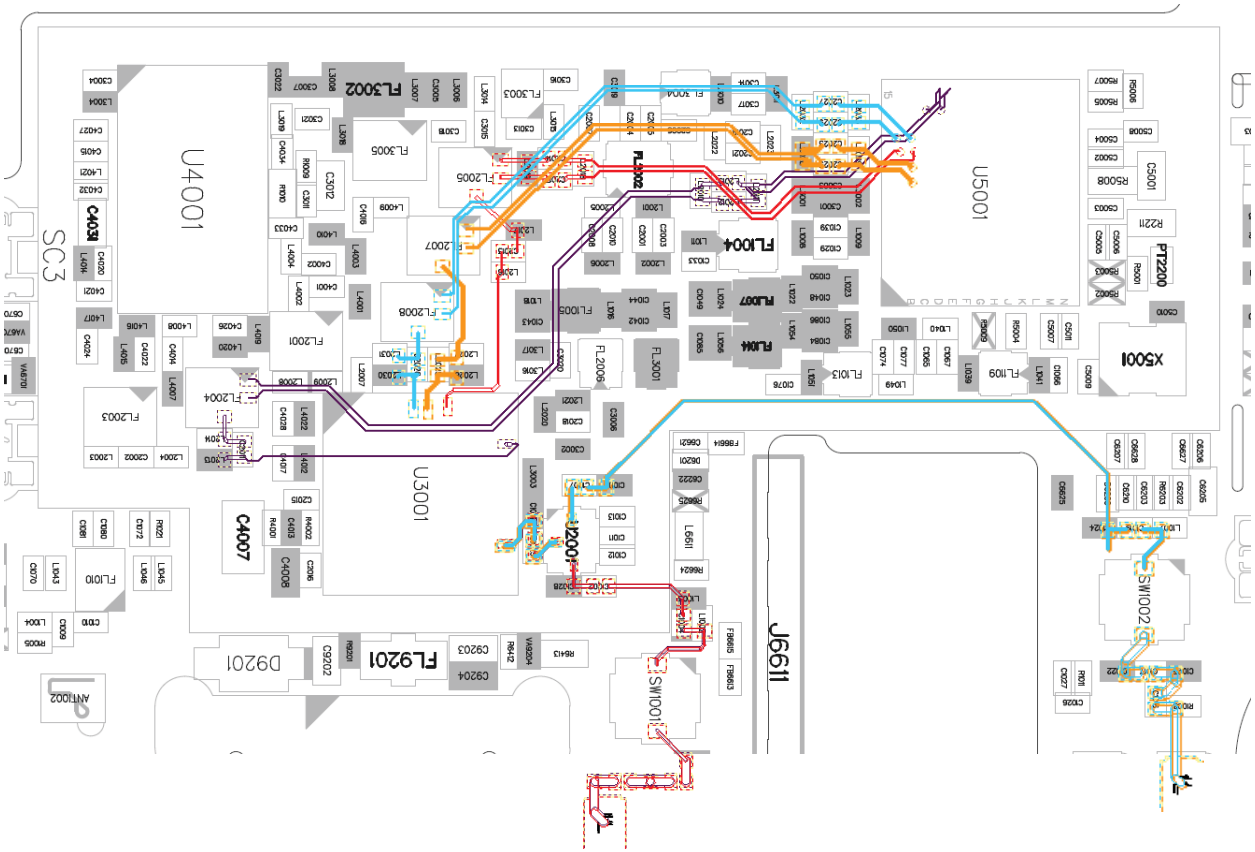




Copyright © 2016 LG Electronics. Inc. All right reserved. Only training and service purposes

## 3.6 WCDMA RF PART

### 3.6.2 Checking RF Signal RX path(WCDMA B1)

**Checking Flow**

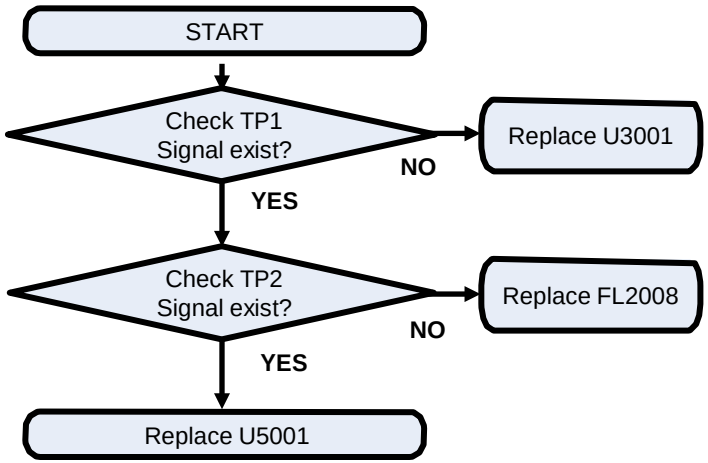


**Image**

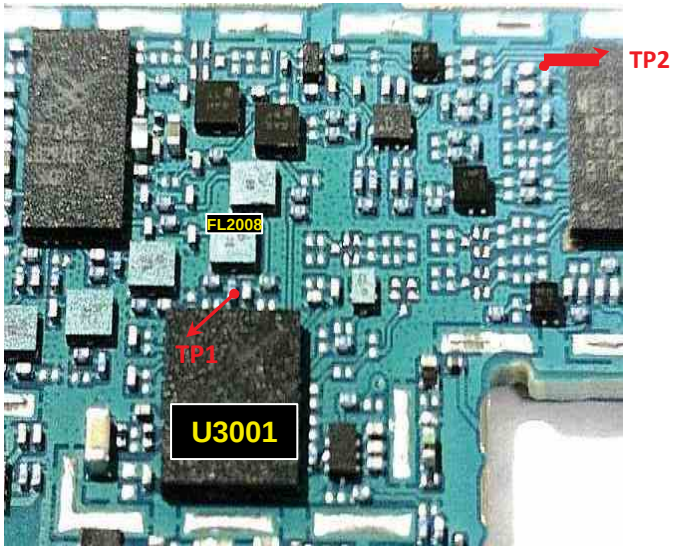


**Circuit Diagram**

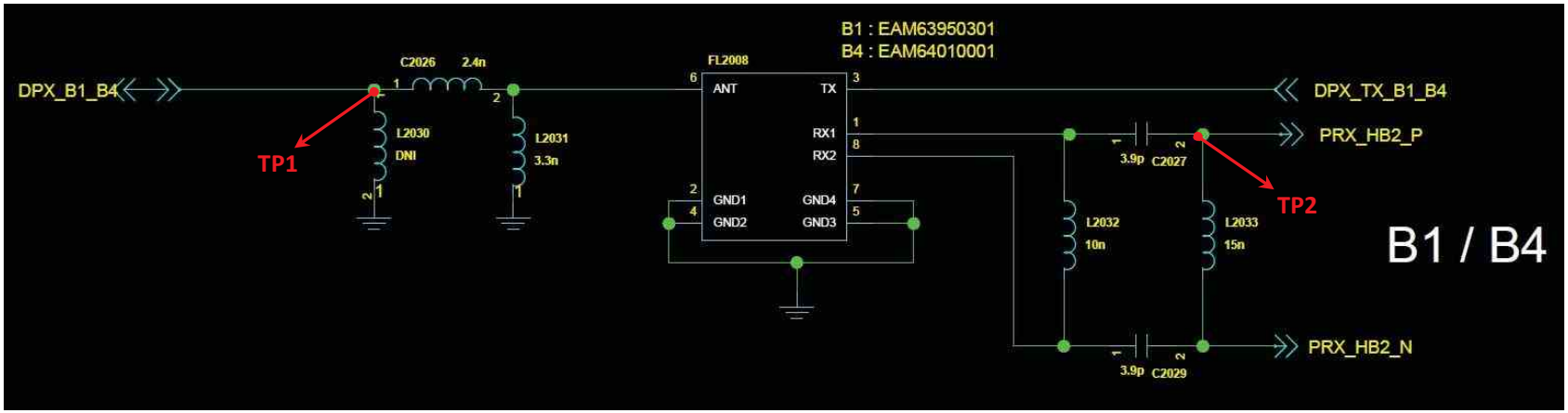



Copyright © 2016 LG Electronics. Inc. All right reserved. Only training and service purposes

## 3.6 WCDMA RF PART

### 3.6.3 Checking RF Signal RX path(SW, WCDMA B5/8)

**Checking Flow**

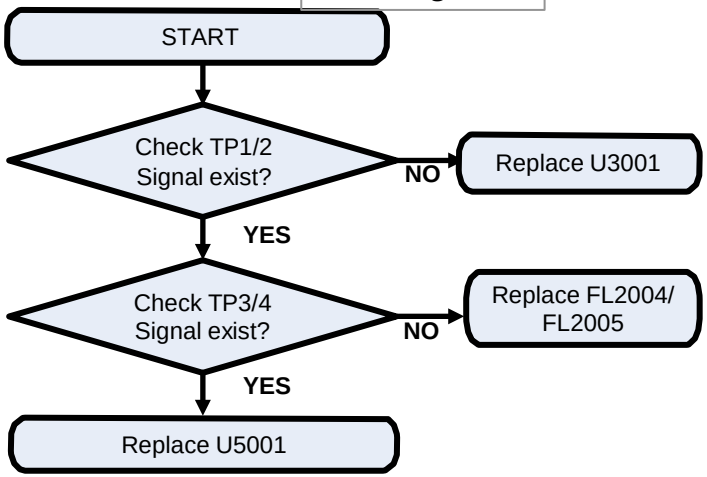


**Image**

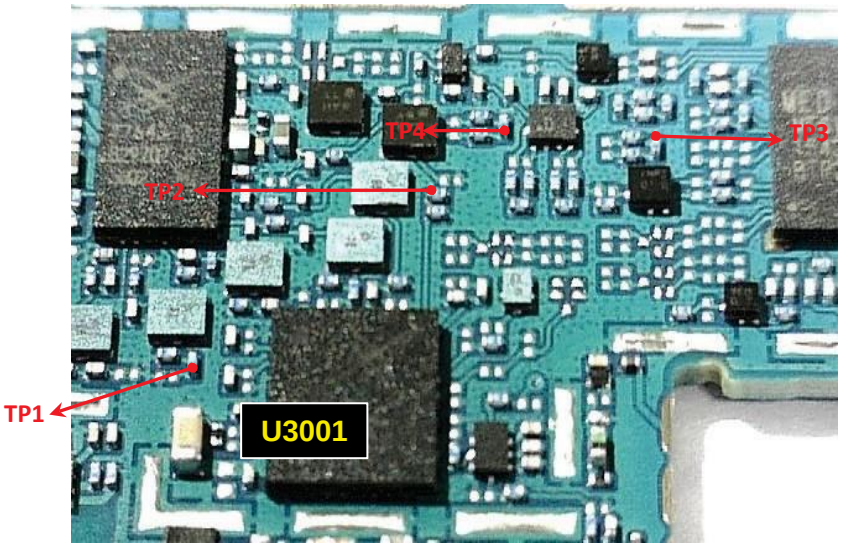


**Circuit Diagram**

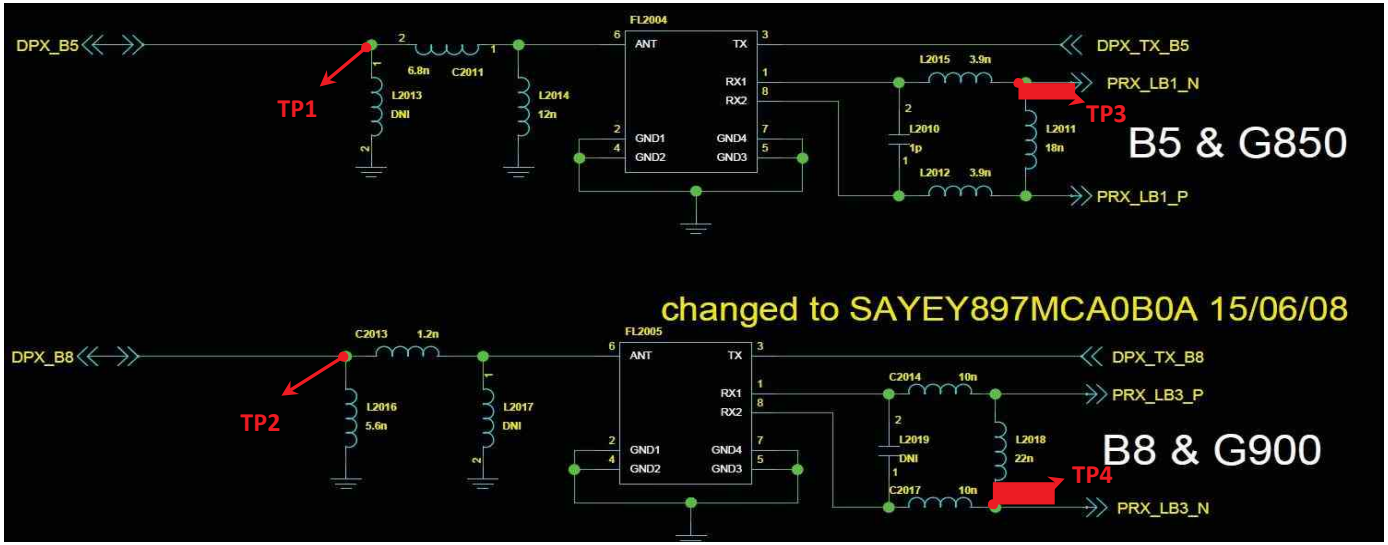



Copyright © 2016 LG Electronics. Inc. All right reserved. Only training and service purposes

## 3.6 WCDMA RF PART

### 3.6.4 WCDMA RF Part TX RF PATH

WCDMA B5 TX PATH
WCDMA B8 TX PATH
WCDMA B1 TX PATH
WCDMA B2 TX PATH

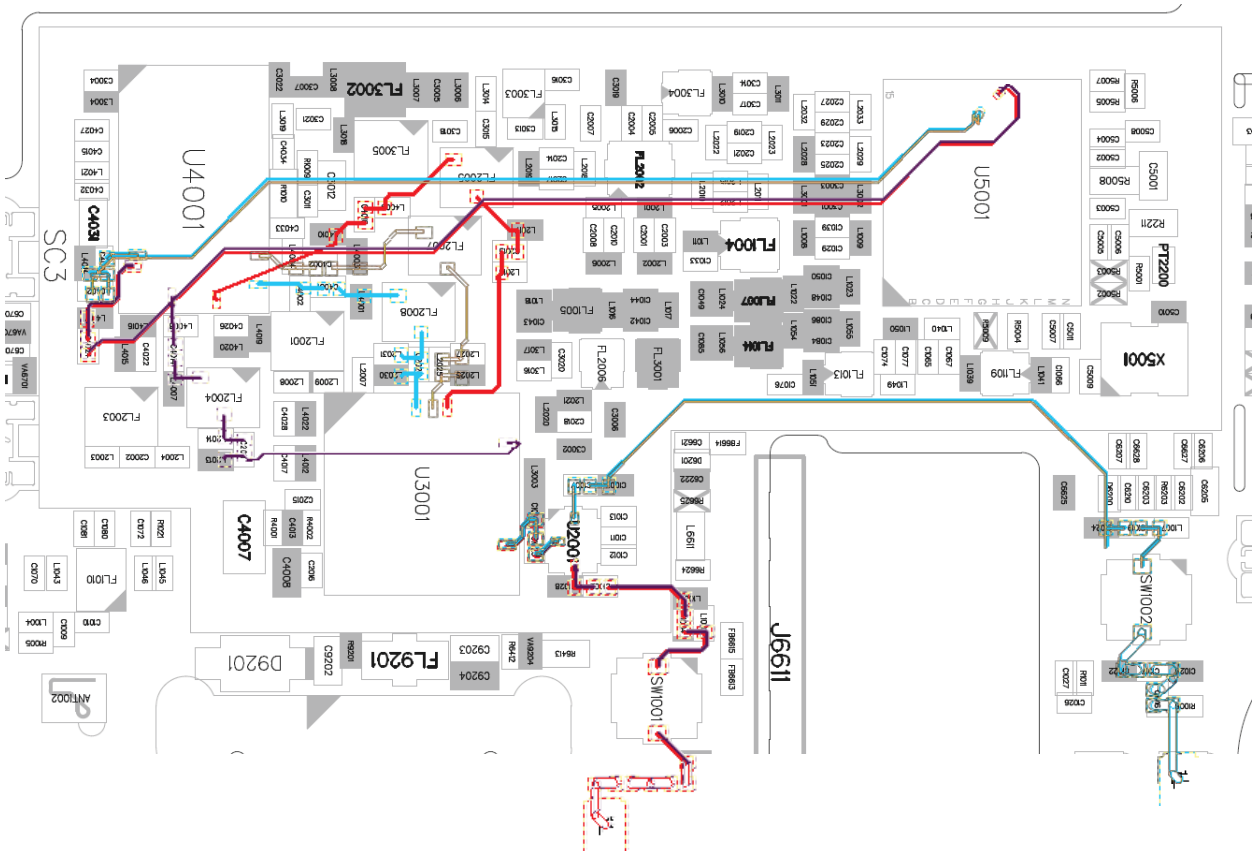




Copyright © 2016 LG Electronics. Inc. All right reserved. Only training and service purposes

## 3.6 WCDMA RF PART

### 3.6.5 Checking RF Signal TX path(WCDMA B1)

**Checking Flow**

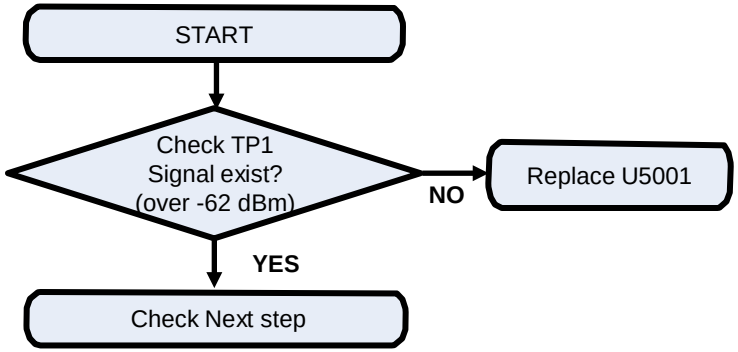


**Image**

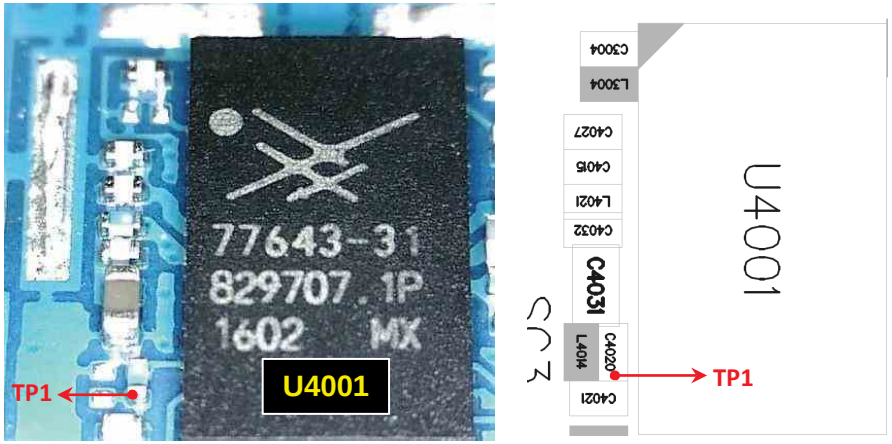


**Circuit Diagram**

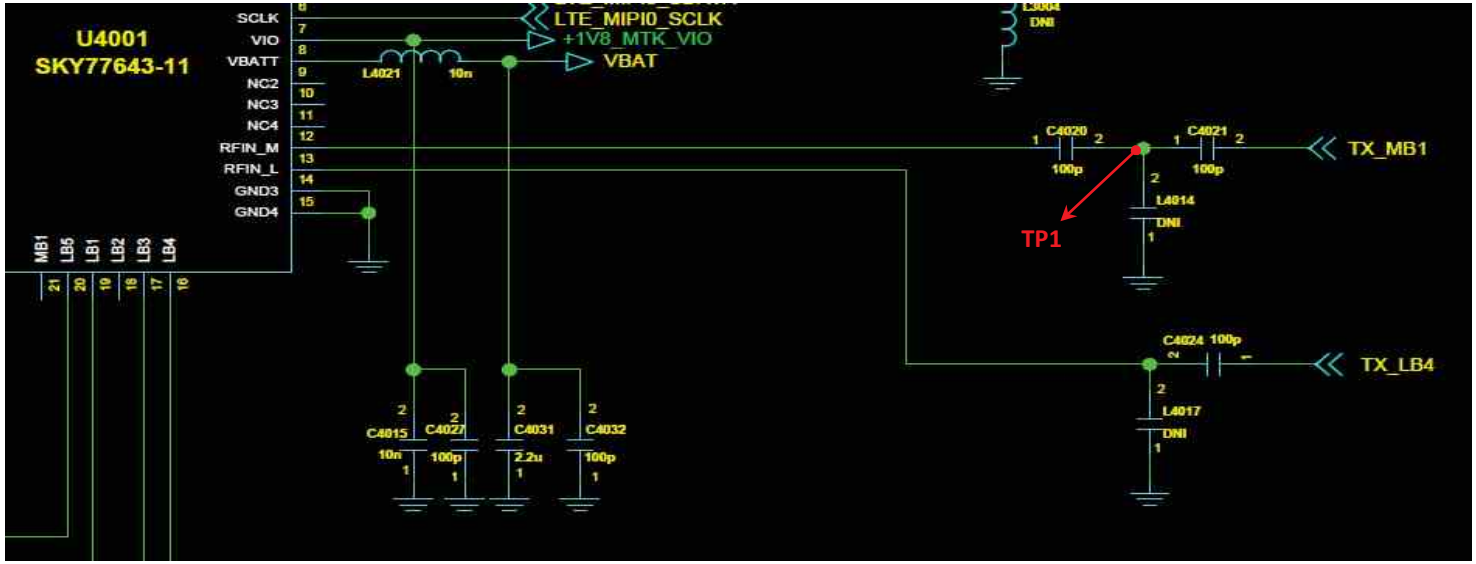



Copyright © 2016 LG Electronics. Inc. All right reserved. Only training and service purposes

## 3.6 WCDMA RF PART
### 3.6.6 Checking RF Signal TX path(WCDMA B1)

**Checking Flow**

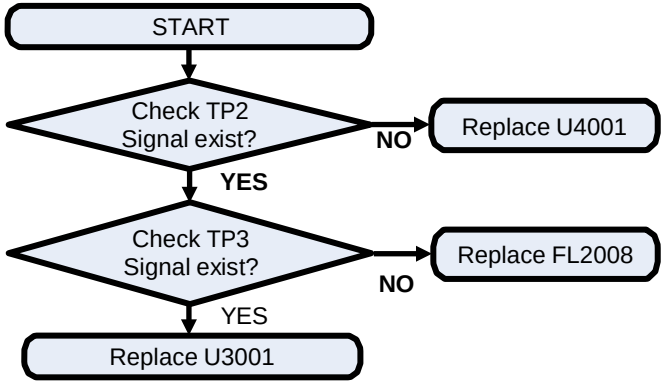


**Image**

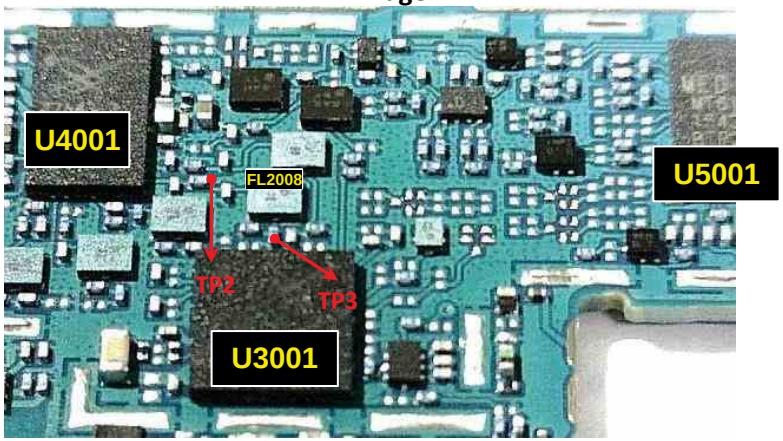


**Circuit Diagram**

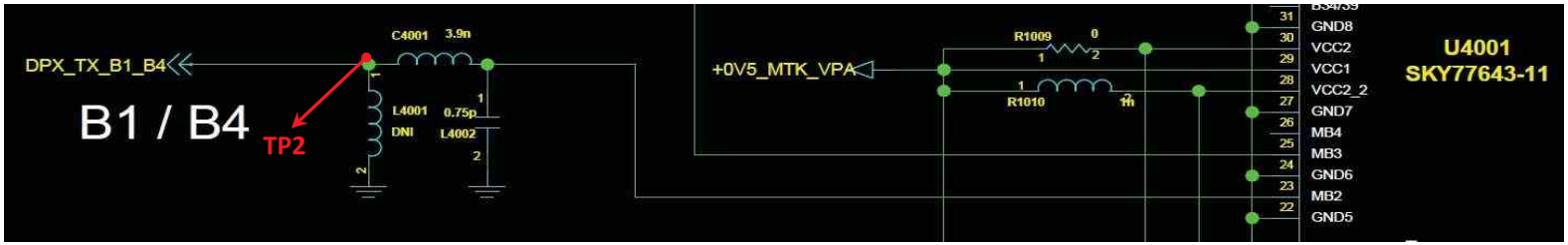


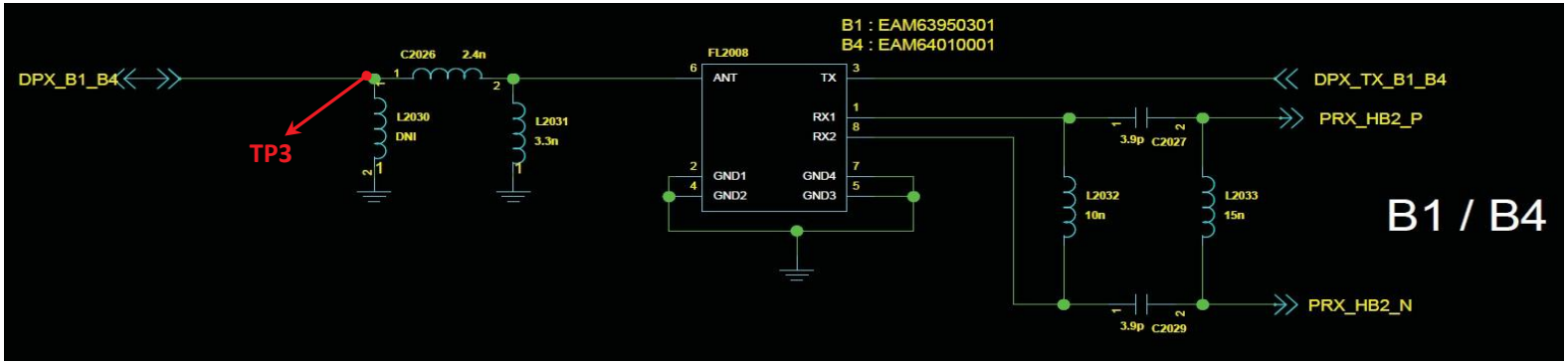



Copyright © 2016 LG Electronics. Inc. All right reserved. Only training and service purposes

## 3.6 WCDMA RF PART

### 3.6.7 Checking RF Signal TX path(WCDMA B5/8)

**Checking Flow**

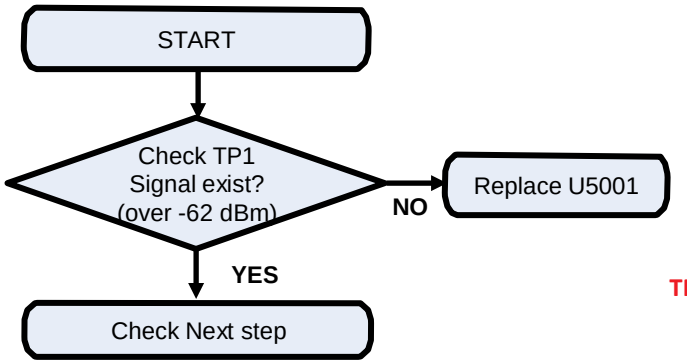


**Image**

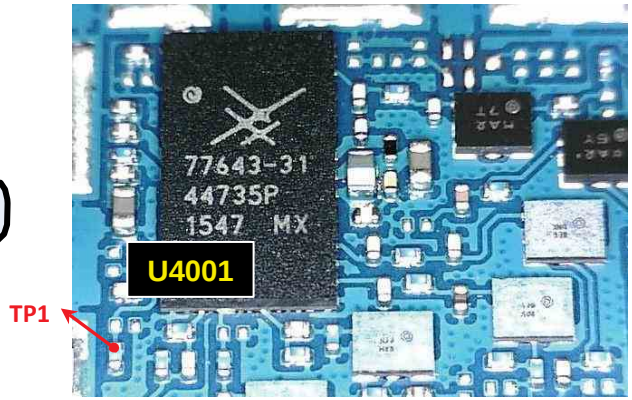


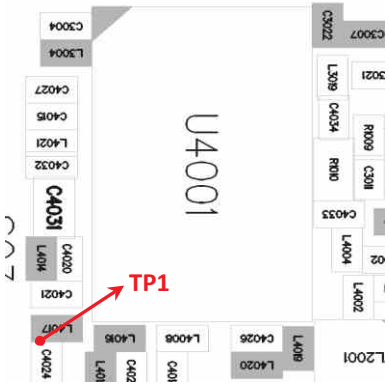


**Circuit Diagram**

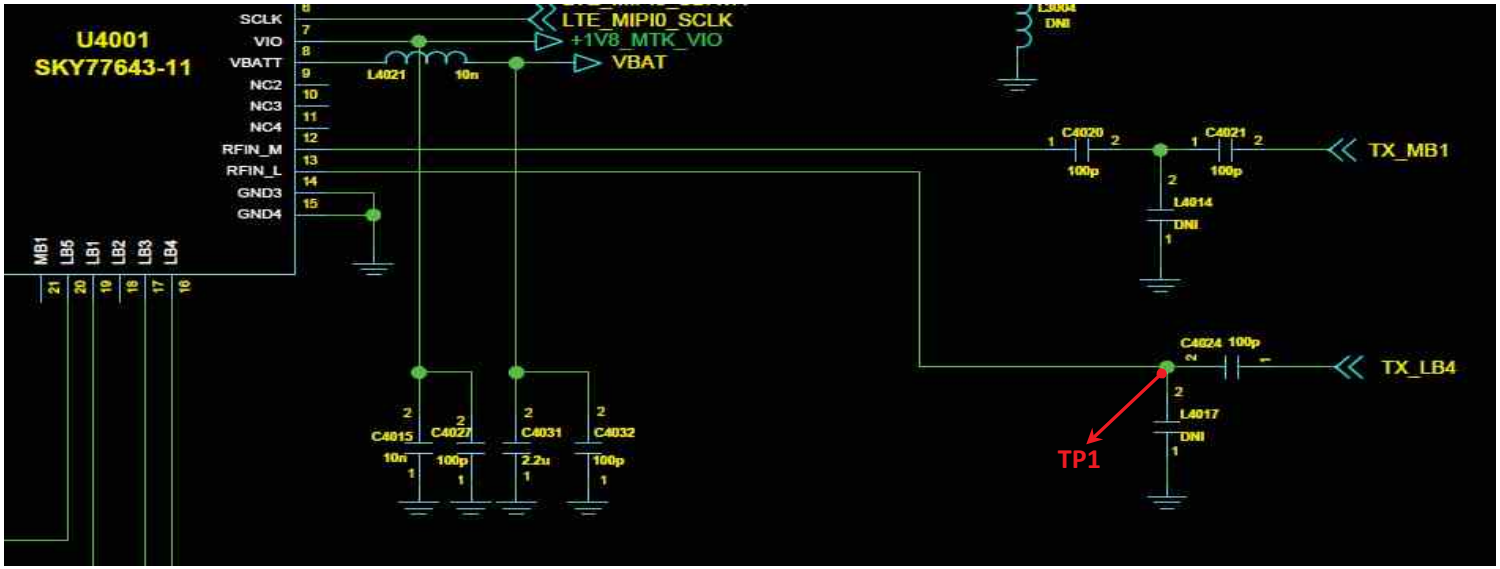




Copyright © 2016 LG Electronics. Inc. All right reserved. Only training and service purposes

## 3.6 WCDMA RF PART

### 3.6.8 Checking RF Signal TX path(WCDMA B5/8)

**Checking Flow**

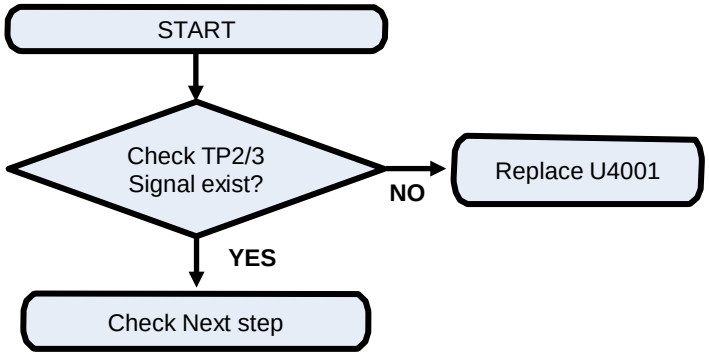


**Image**

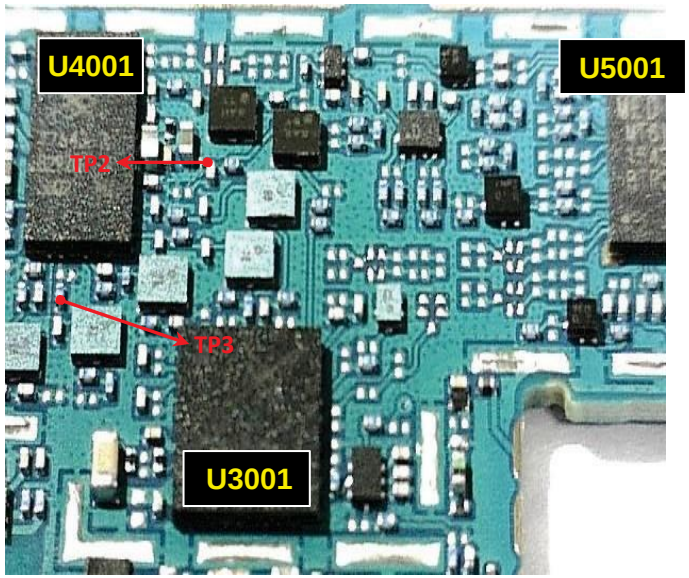


**Circuit Diagram**

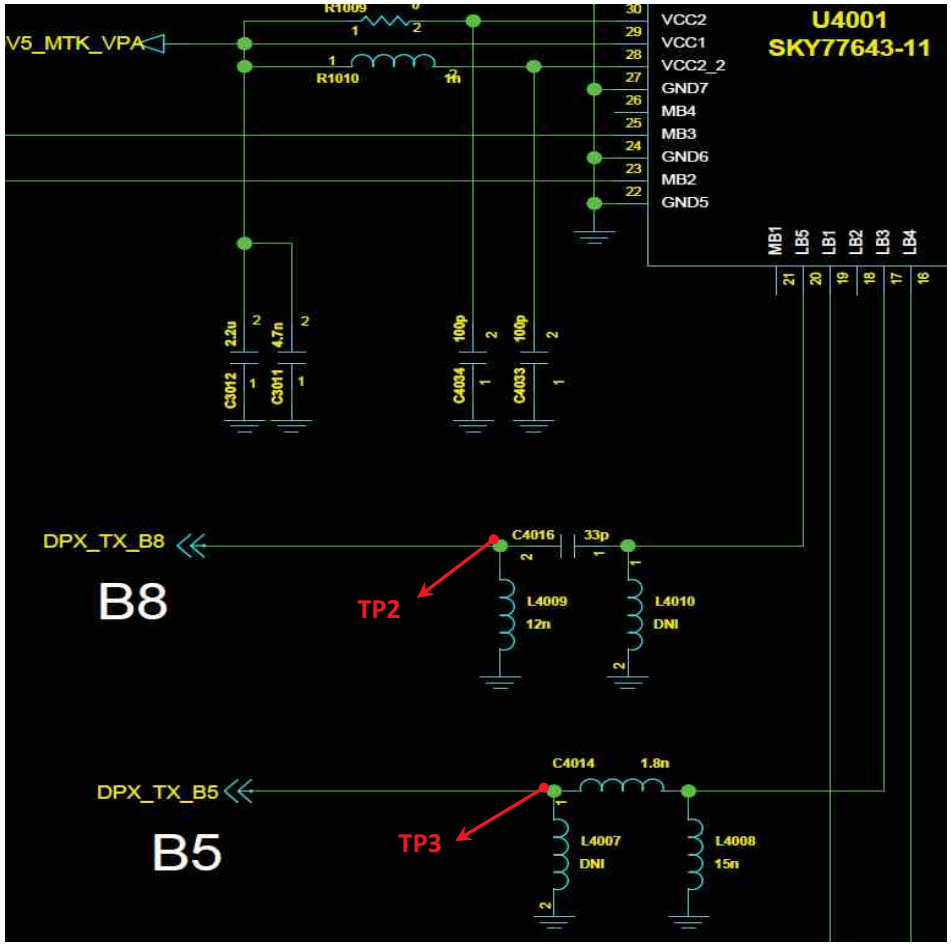




Copyright © 2016 LG Electronics. Inc. All right reserved. Only training and service purposes

## 3.6 WCDMA RF PART

### 3.6.9 Checking RF Signal TX path(WCDMA B5/8)

**Checking Flow**

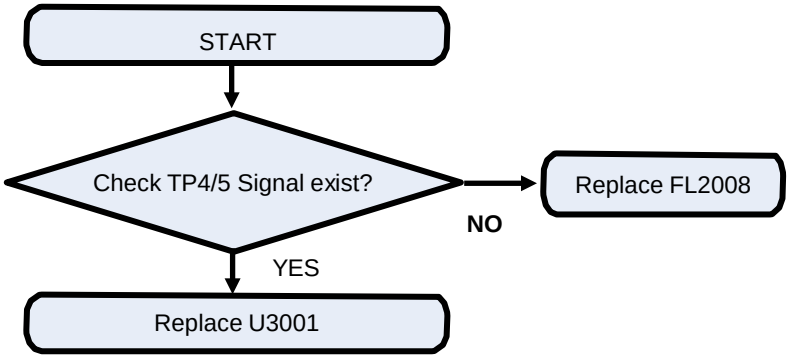


**Image**

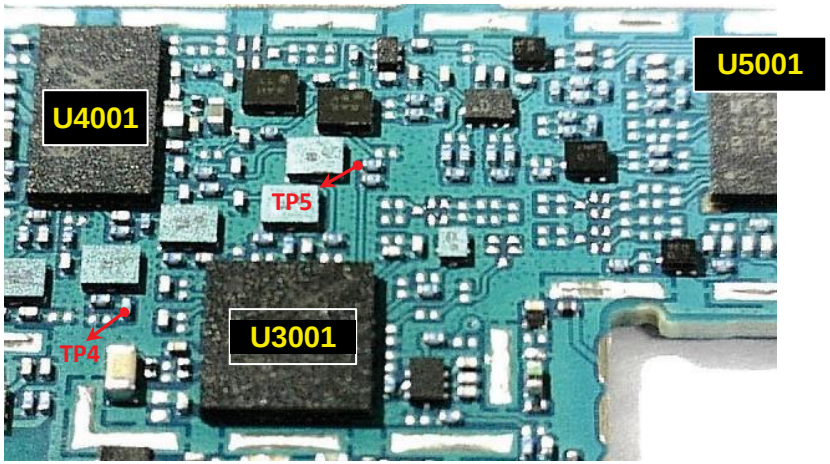


**Circuit Diagram**

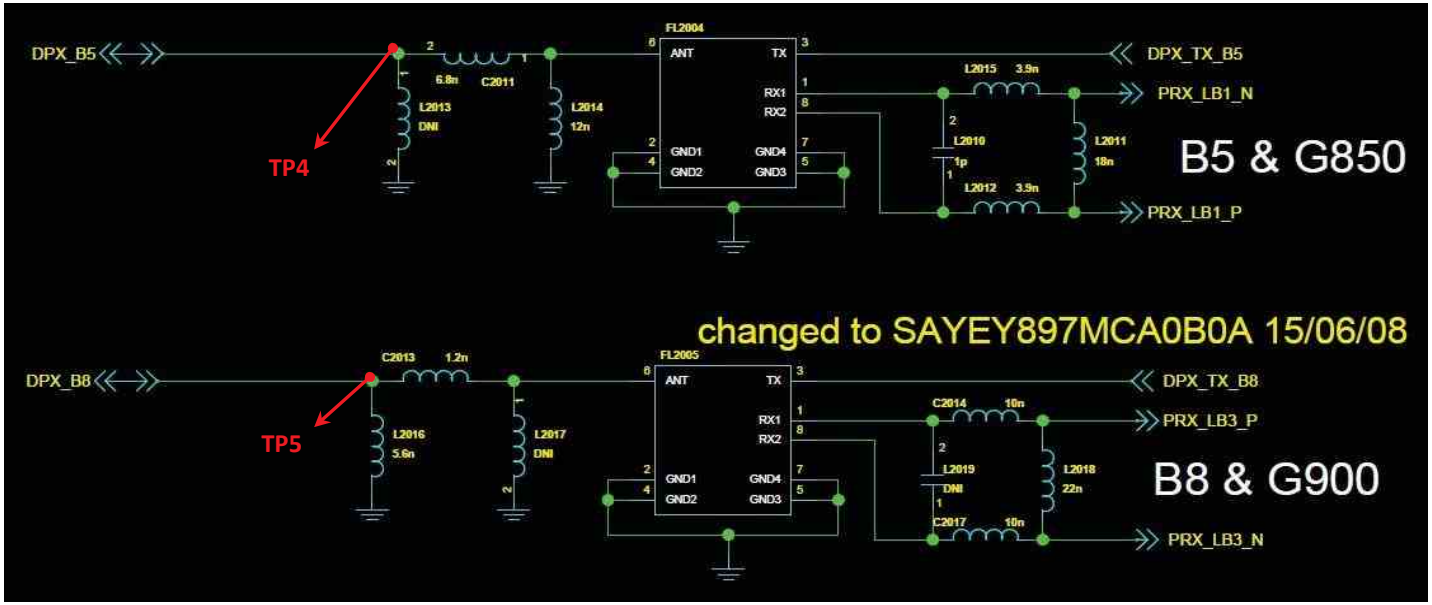



Copyright © 2016 LG Electronics. Inc. All right reserved. Only training and service purposes

## 3.7 LTE RF PART

**LTE RF Part support LTE B3/7/28 with ASM, PAM, Transceiver component**

**Checking Flow**

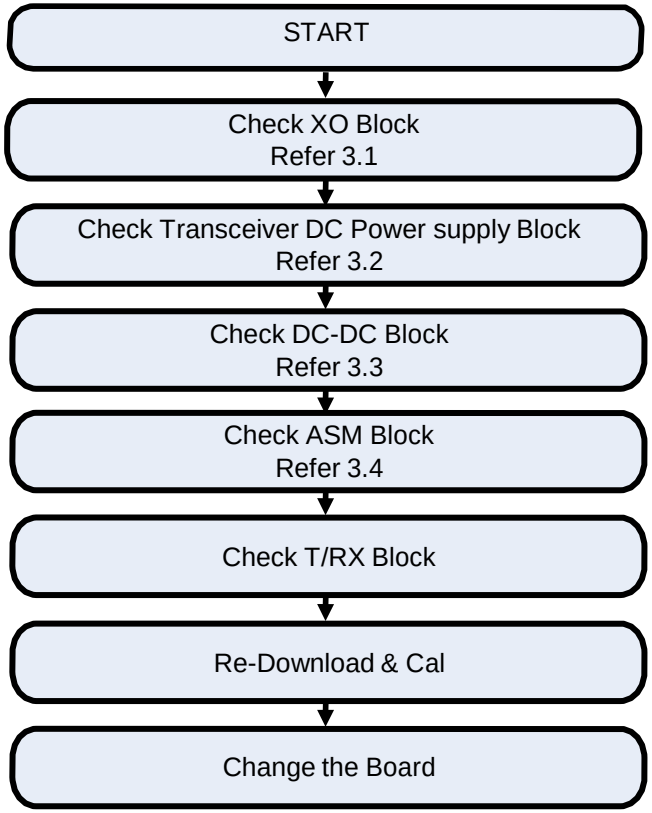




Copyright © 2016 LG Electronics. Inc. All right reserved. Only training and service purposes

## 3.7 LTE RF PART

### 3.7.1 LTE RF Part RX RF PATH

LTE B3 RX PATH
LTE B7 RX PATH
LTE B20 RX PATH

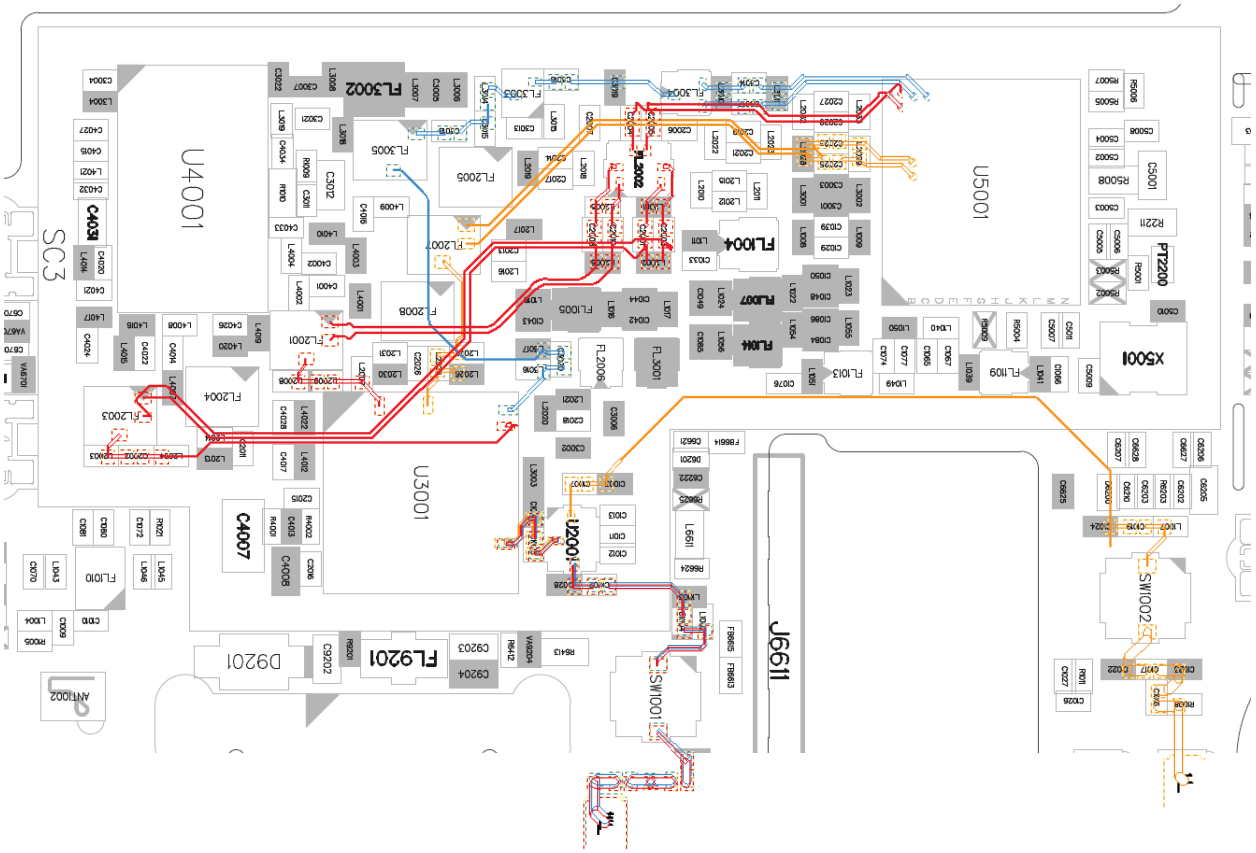




Copyright © 2016 LG Electronics. Inc. All right reserved. Only training and service purposes

## 3.7 LTE RF PART

### 3.7.2 Checking RF Signal RX path(LTE B3)

**Checking Flow**

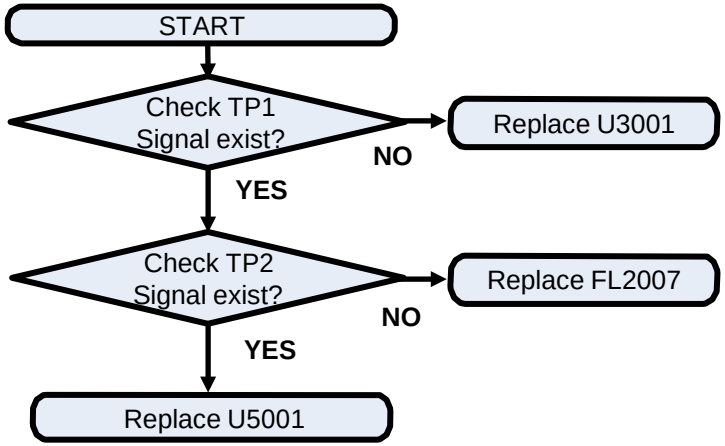


**Image**

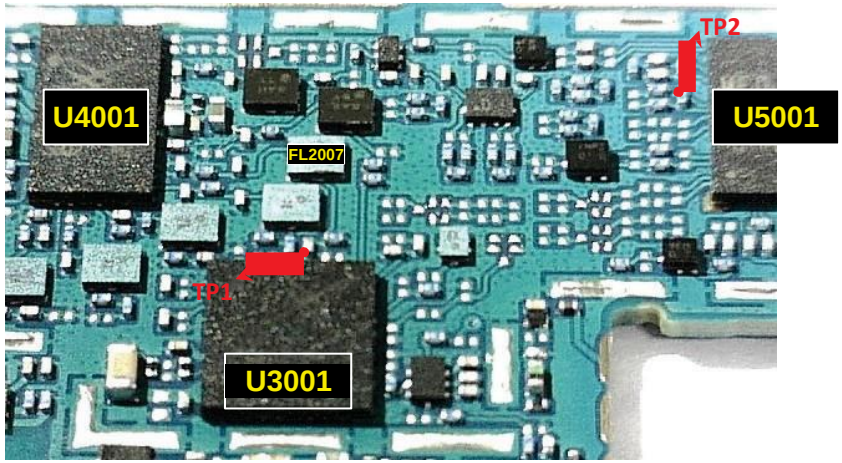


**Circuit Diagram**

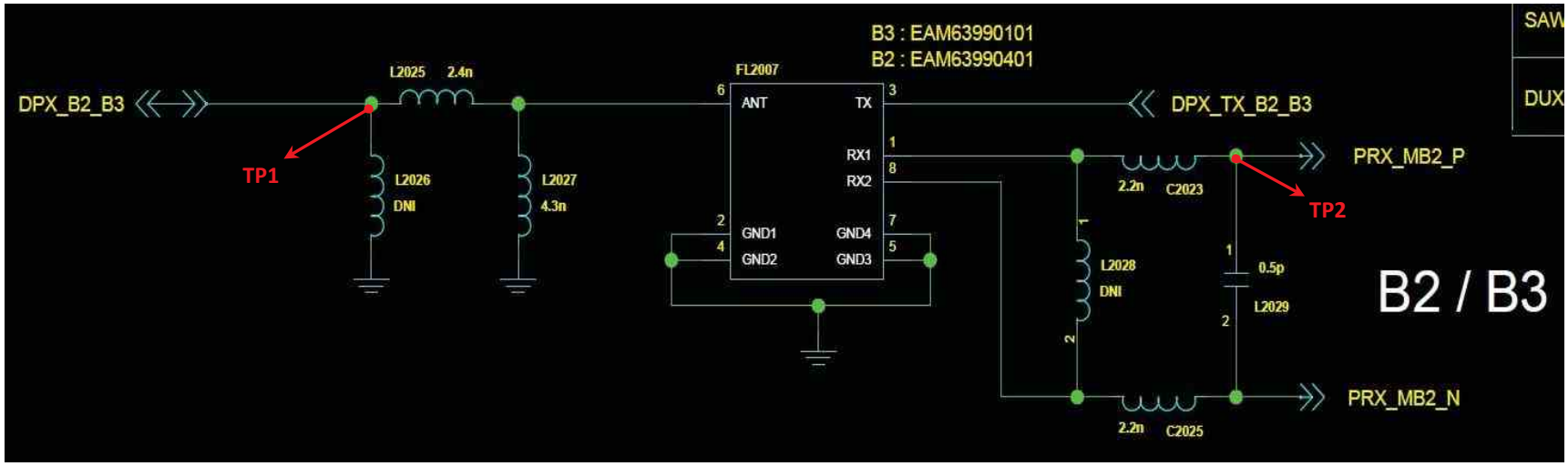




Copyright © 2016 LG Electronics. Inc. All right reserved. Only training and service purposes

## 3.7 LTE RF PART

### 3.7.3 Checking RF Signal RX path(LTE B7)

**Checking Flow**

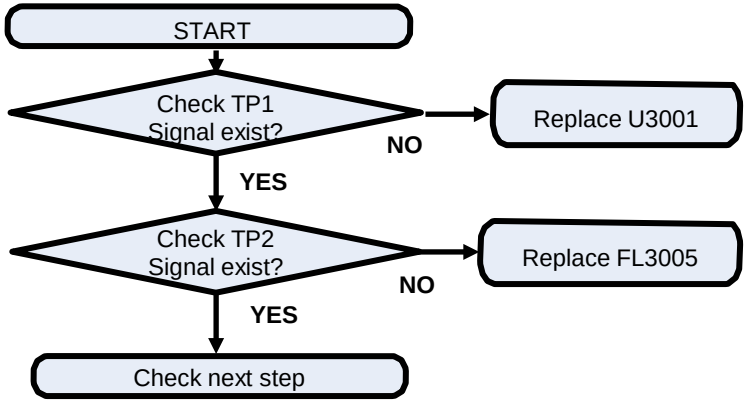


**Image**

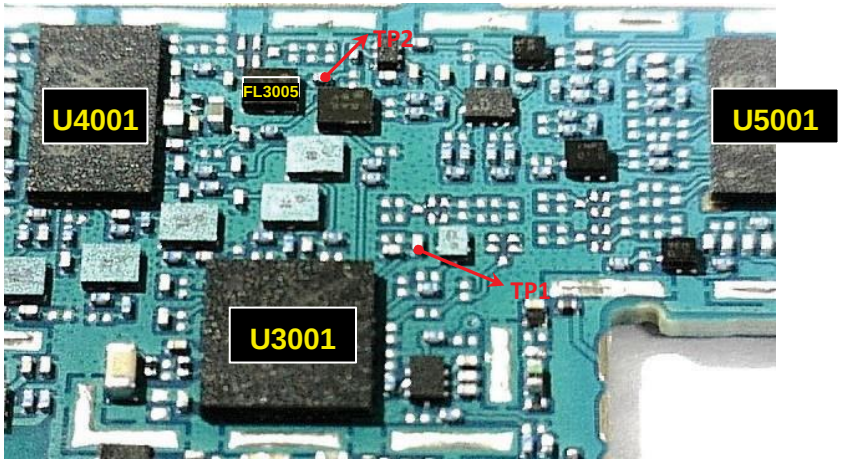


**Circuit Diagram**

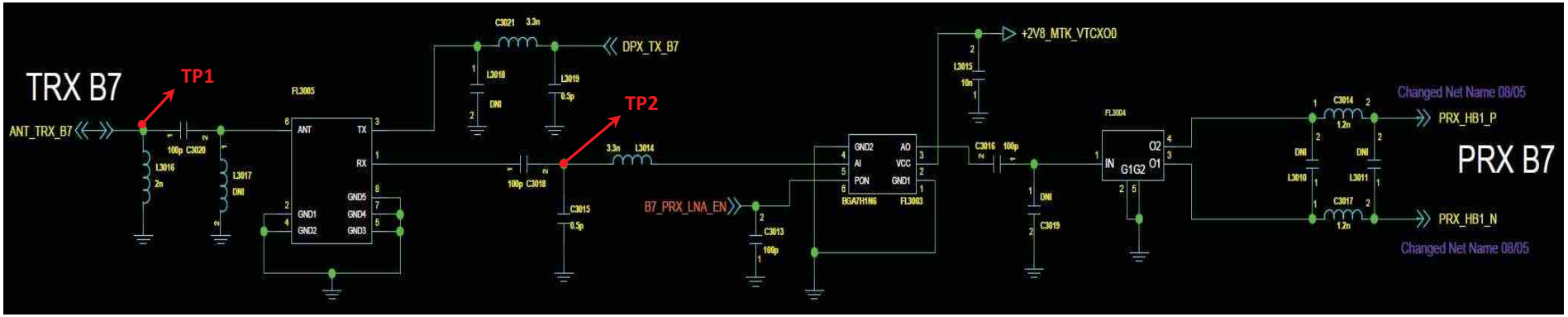




Copyright © 2016 LG Electronics. Inc. All right reserved. Only training and service purposes

## 3.7 LTE RF PART

### 3.7.4 Checking RF Signal RX path(LTE B7)

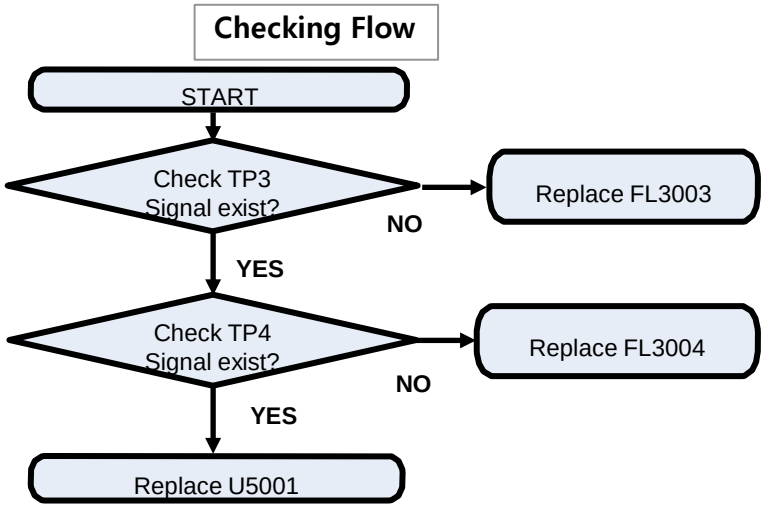


Image

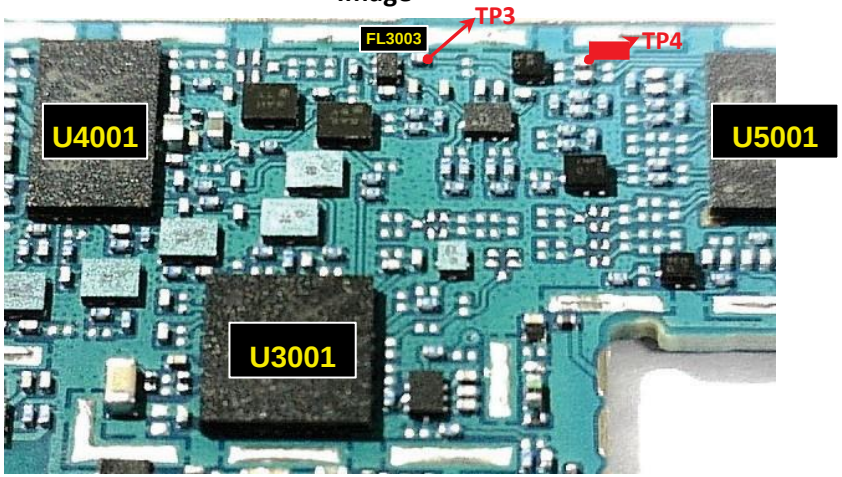


Circuit Diagram

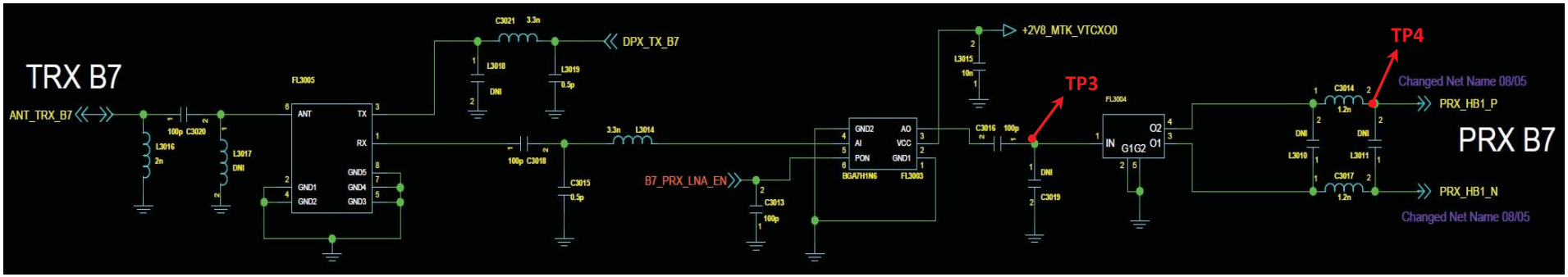




Copyright © 2016 LG Electronics. Inc. All right reserved. Only training and service purposes

## 3.7 LTE RF PART

### 3.7.5 Checking RF Signal RX path(LTE B28A)

**Checking Flow**

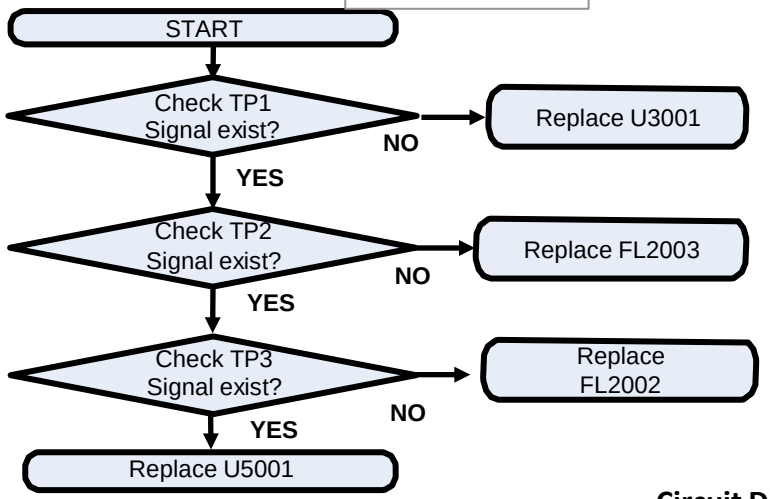


**Image**

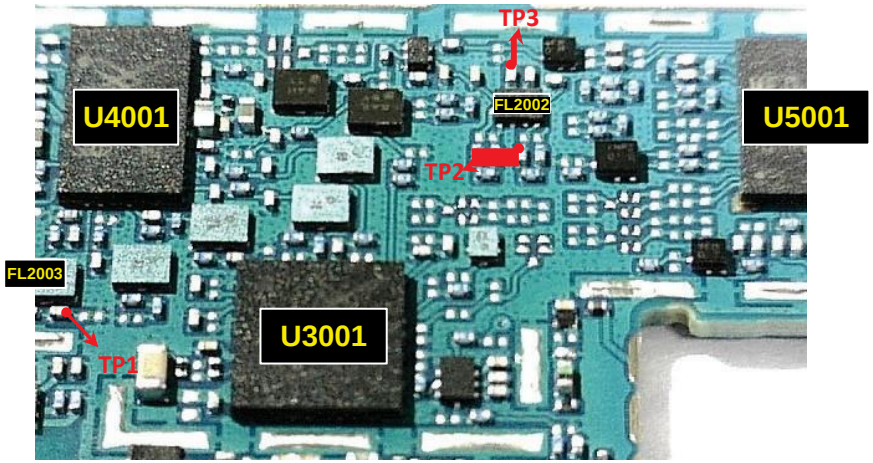


**Circuit Diagram**

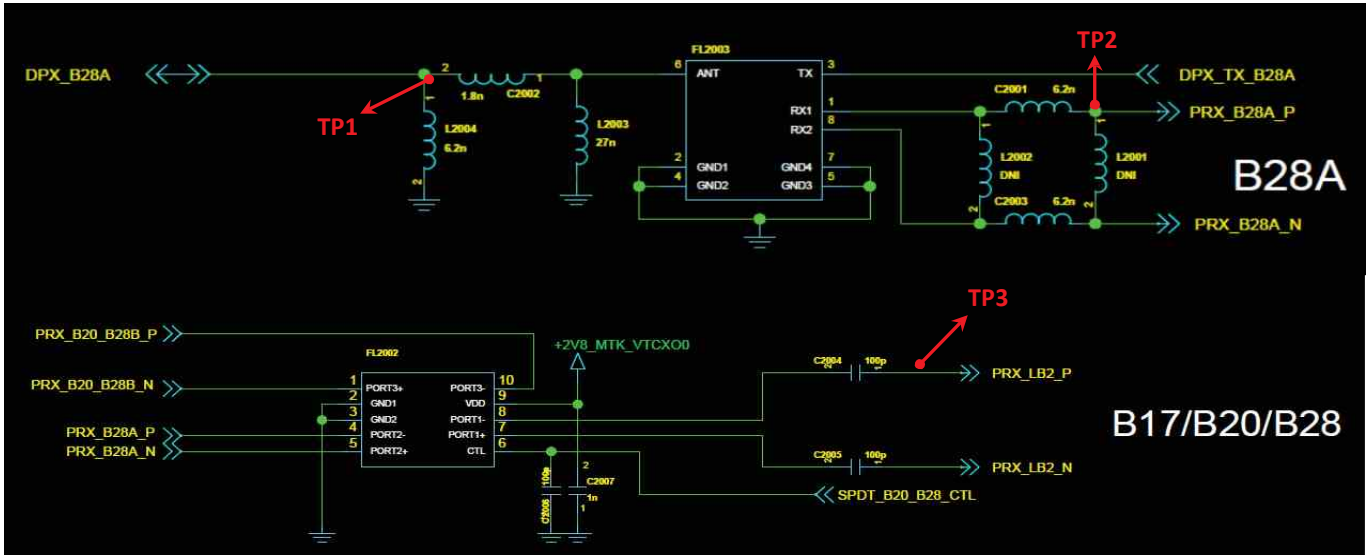




Copyright © 2016 LG Electronics. Inc. All right reserved. Only training and service purposes

## 3.7 LTE RF PART
### 3.7.6 Checking RF Signal RX path(LTE B28B)

**Checking Flow**

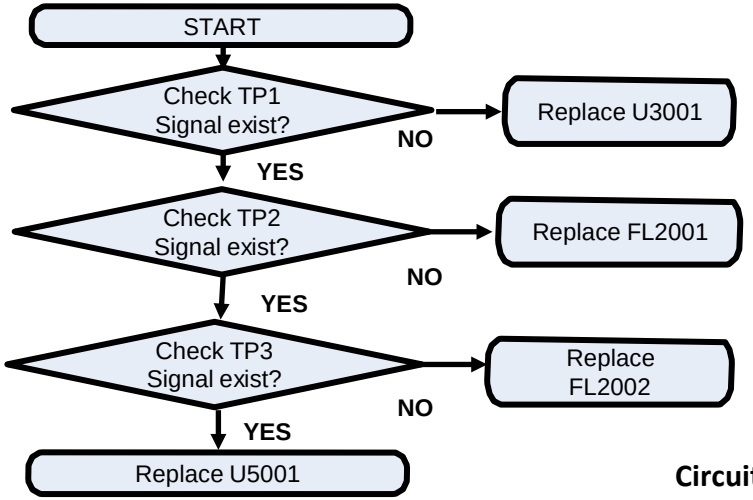


**Image**

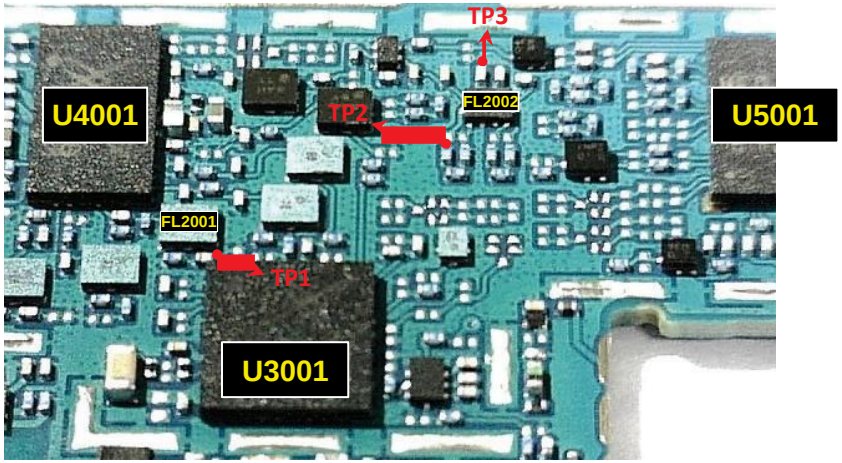


**Circuit Diagram**

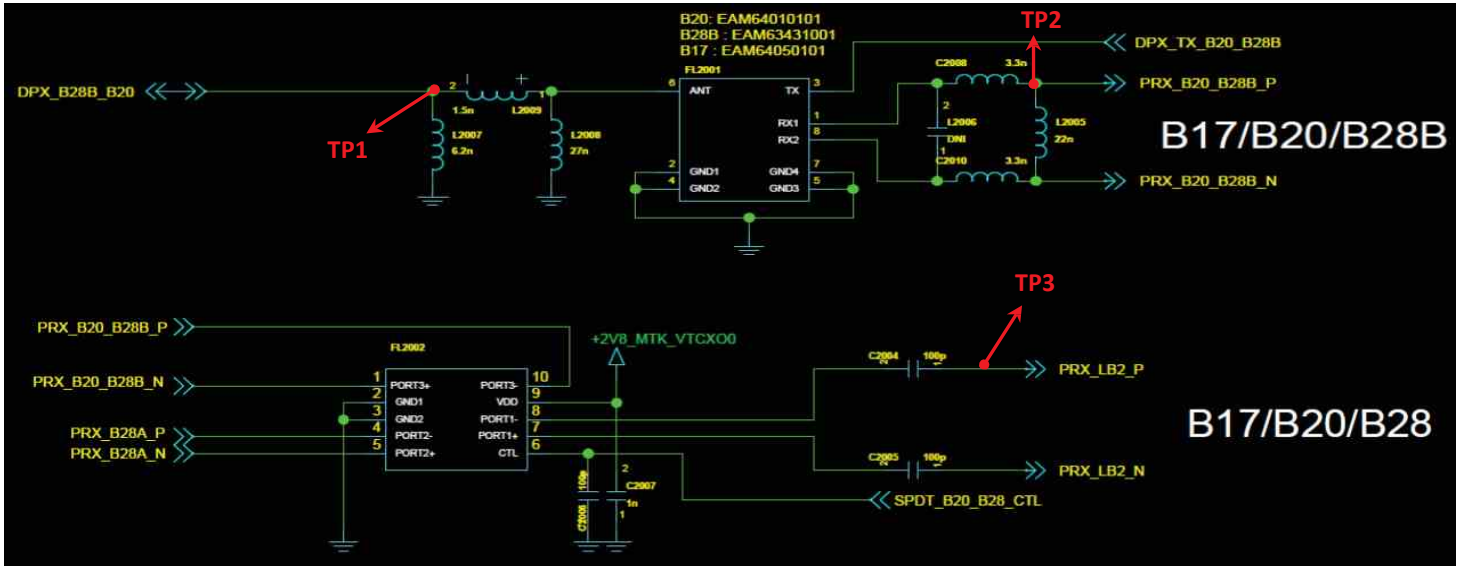



Copyright © 2016 LG Electronics. Inc. All right reserved. Only training and service purposes

## 3.7 LTE RF PART

### 3.7.7 LTE RF Part DRX RF PATH

LTE B3 DRX PATH
LTE B7 DRX PATH
LTE B20 DRX PATH

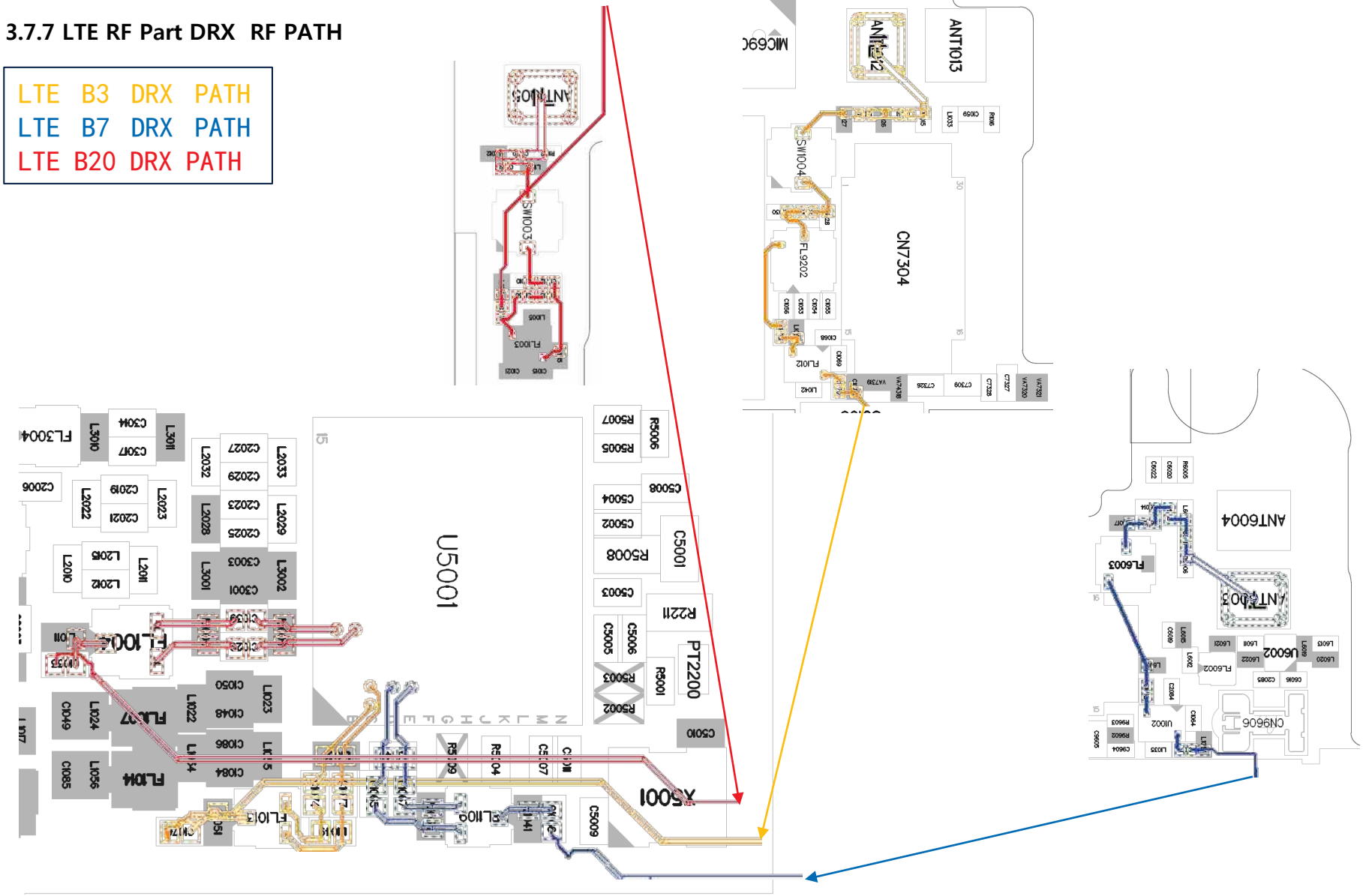



Copyright © 2016 LG Electronics. Inc. All right reserved. Only training and service purposes

## 3.7 LTE RF PART
### 3.7.8 Checking RF Signal DRX path(LTE B3)

**Checking Flow**

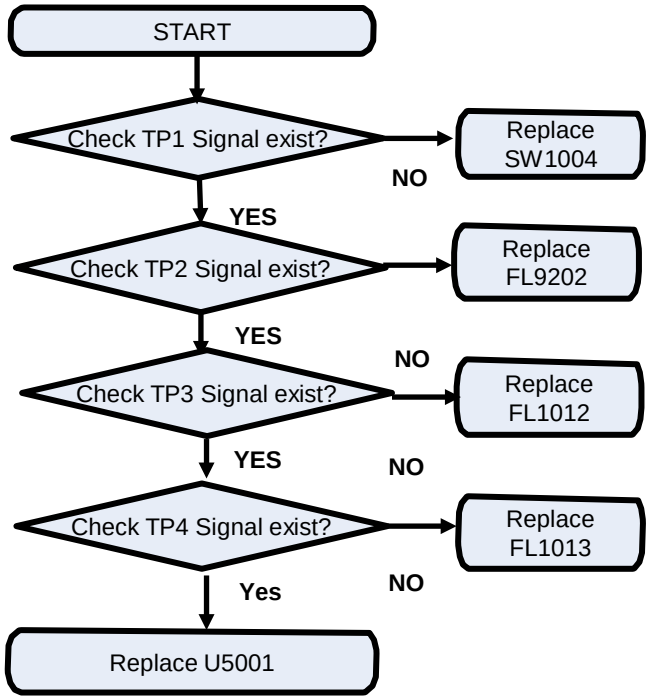


**Image**

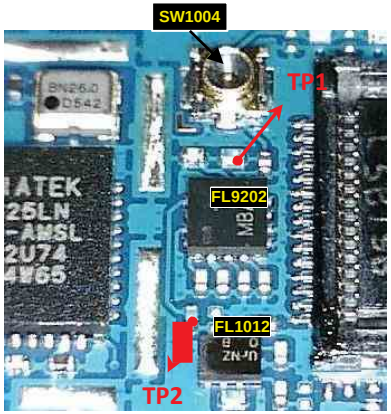


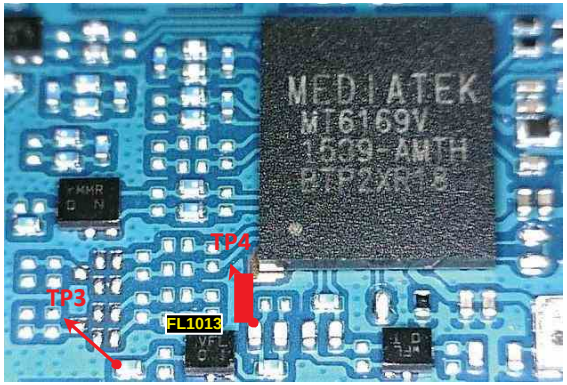


**Circuit Diagram**

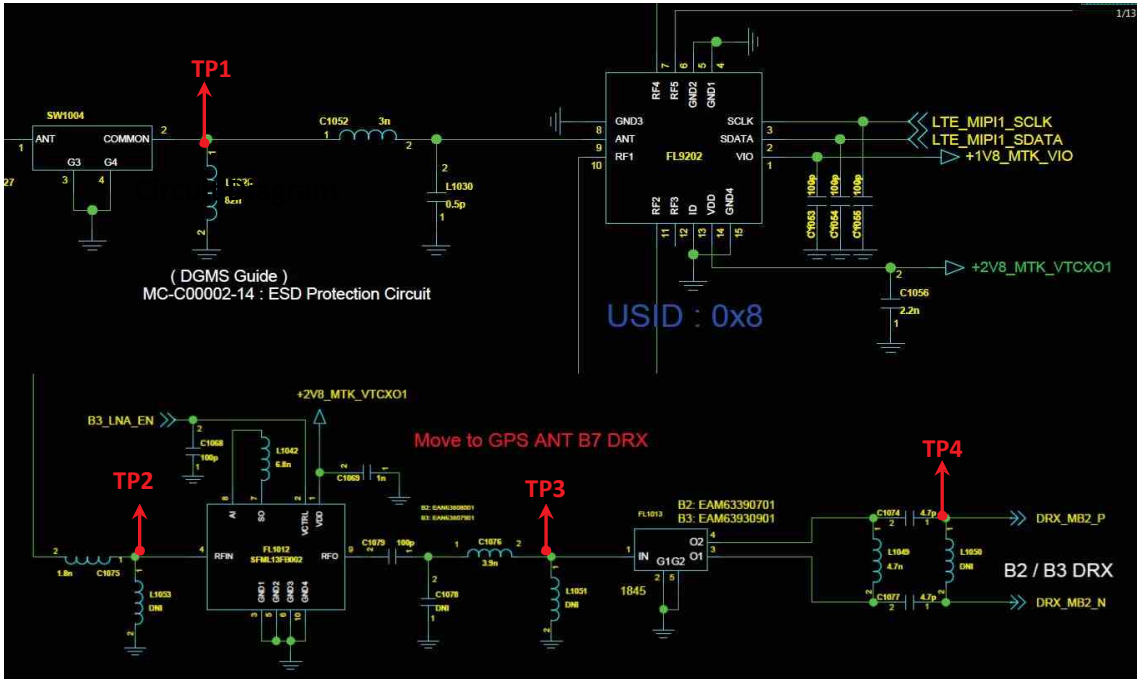



Copyright © 2016 LG Electronics. Inc. All right reserved. Only training and service purposes

## 3.7 LTE RF PART

### 3.7.9 Checking RF Signal DRX path(LTE B7)

**Checking Flow**

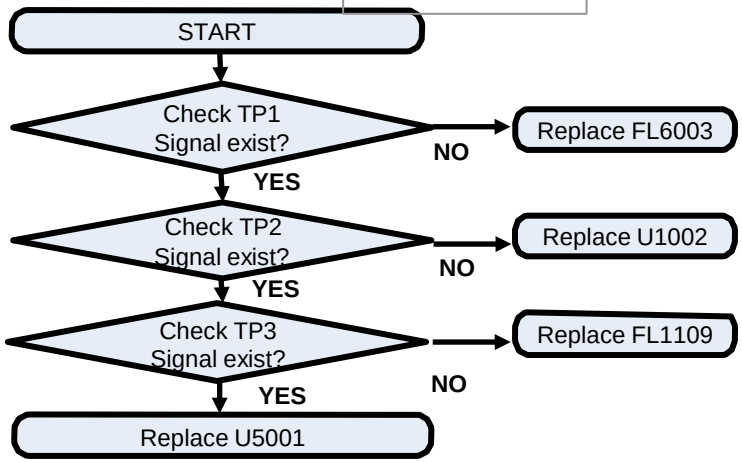


**Image**

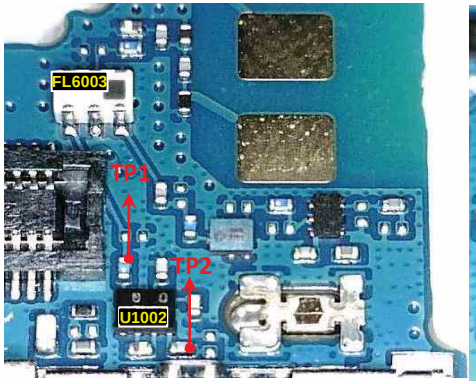


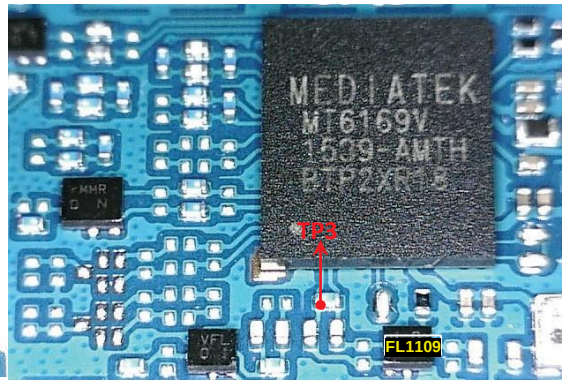


**Circuit Diagram**

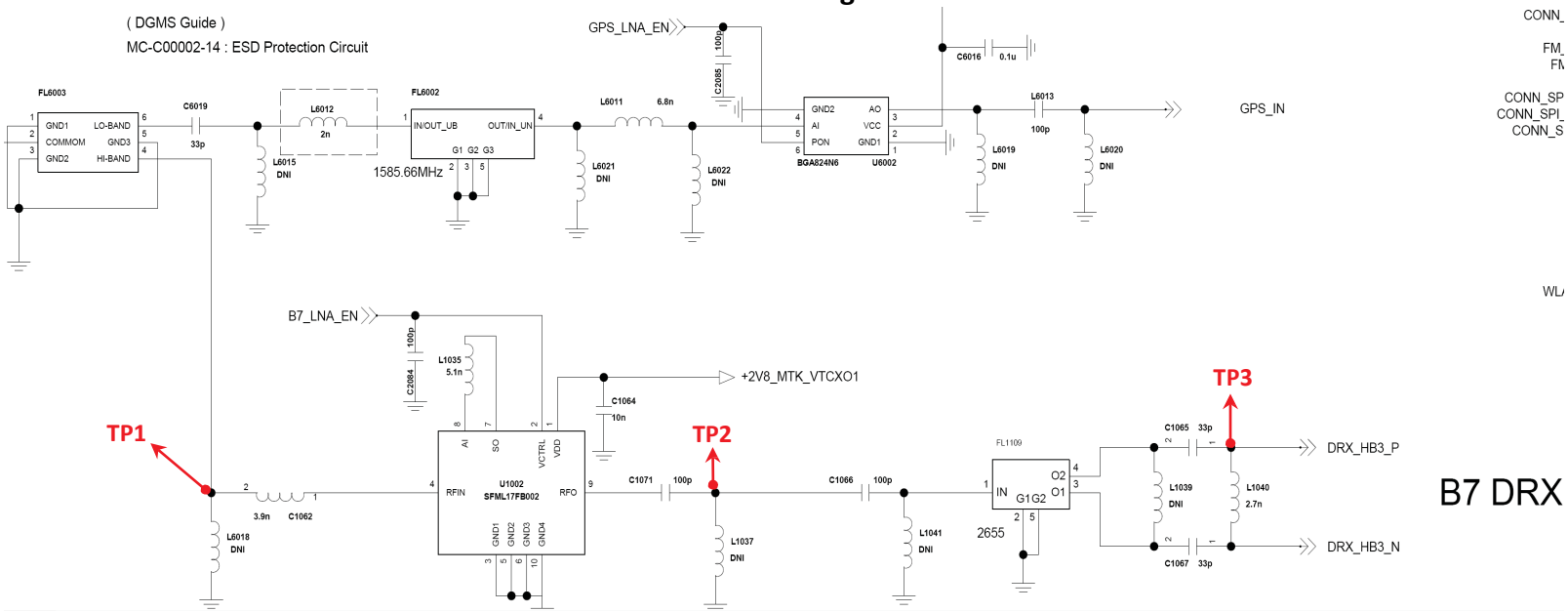




Copyright © 2016 LG Electronics. Inc. All right reserved. Only training and service purposes

## 3.7 LTE RF PART

### 3.7.10 Checking RF Signal DRX path(LTE B28)

**Checking Flow**

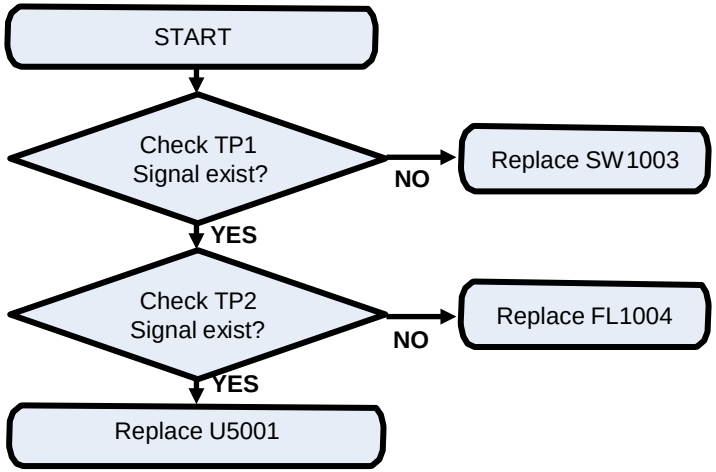


**Image**

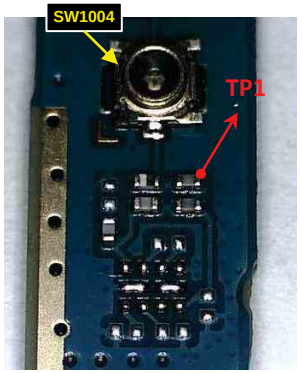


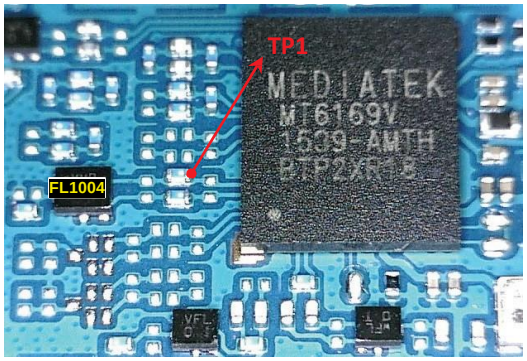


**Circuit Diagram**

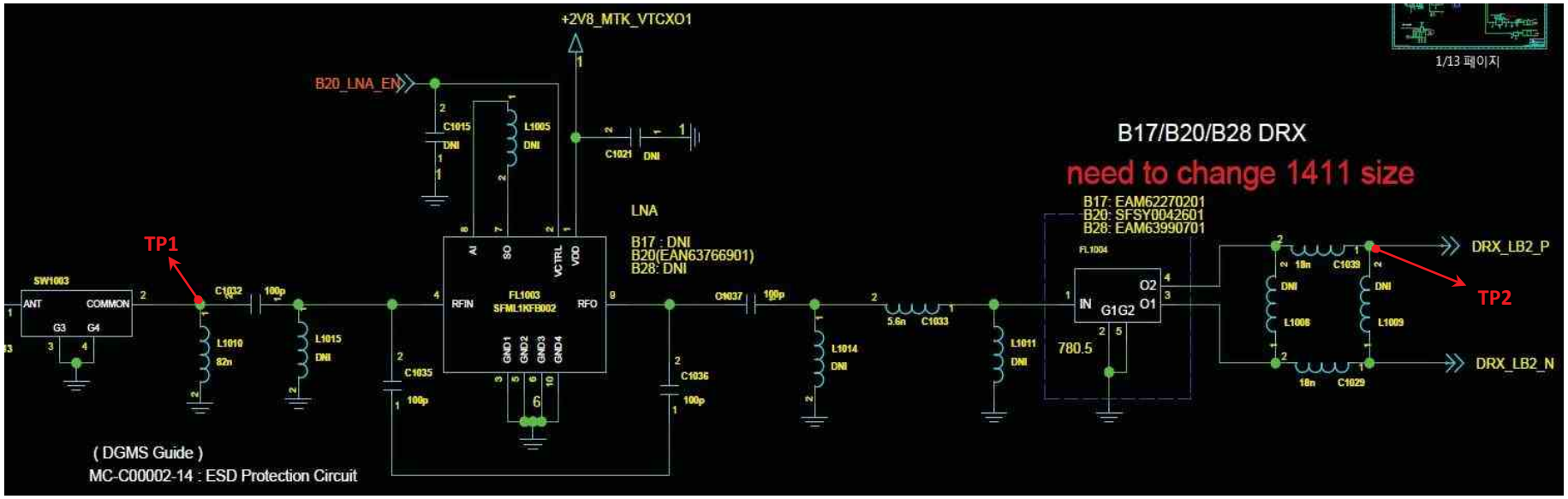




Copyright © 2016 LG Electronics. Inc. All right reserved. Only training and service purposes

## 3.7 LTE RF PART

### 3.7.11 Checking RF Signal DRX path(LTE B28)

LTE B3 TX PATH
LTE B7 TX PATH
LTE B28 TX PATH

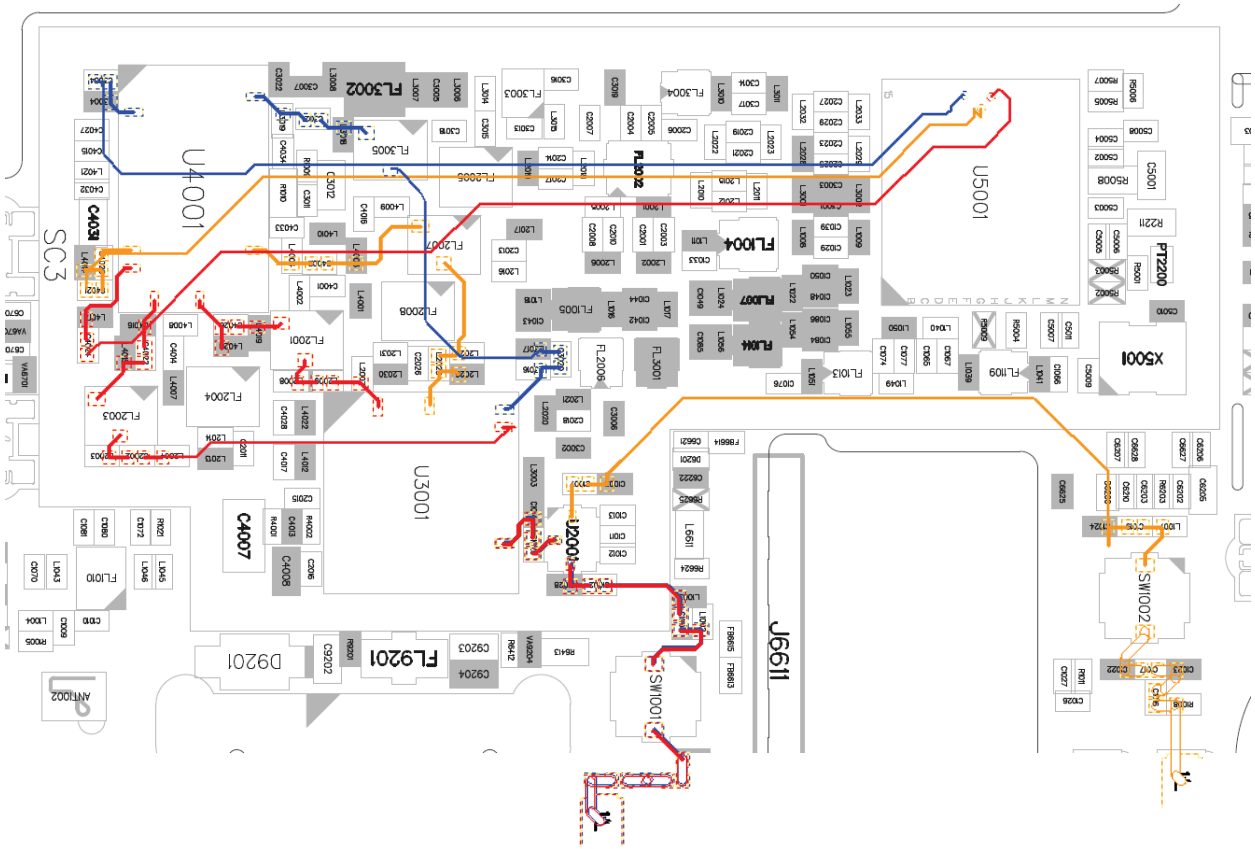




Copyright © 2016 LG Electronics. Inc. All right reserved. Only training and service purposes

## 3.7 LTE RF PART

### 3.7.12 Checking RF Signal TX path(LTE B3)

**Checking Flow**

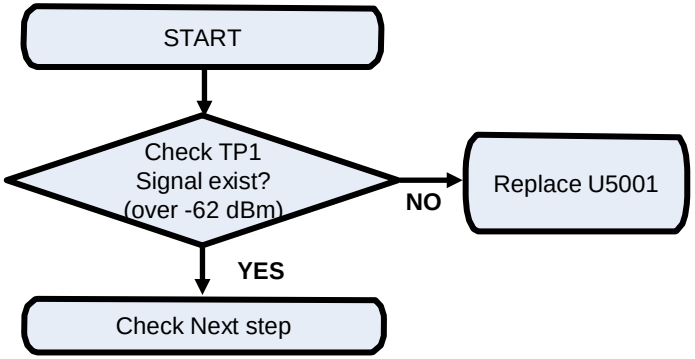


**Image**

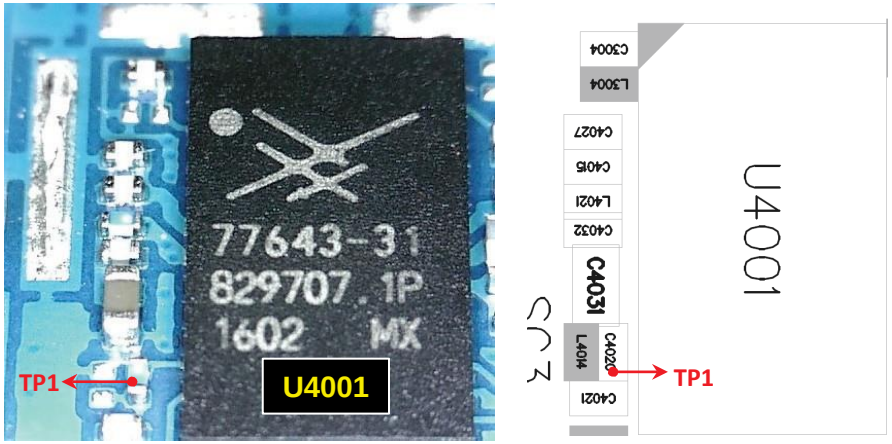


**Circuit Diagram**

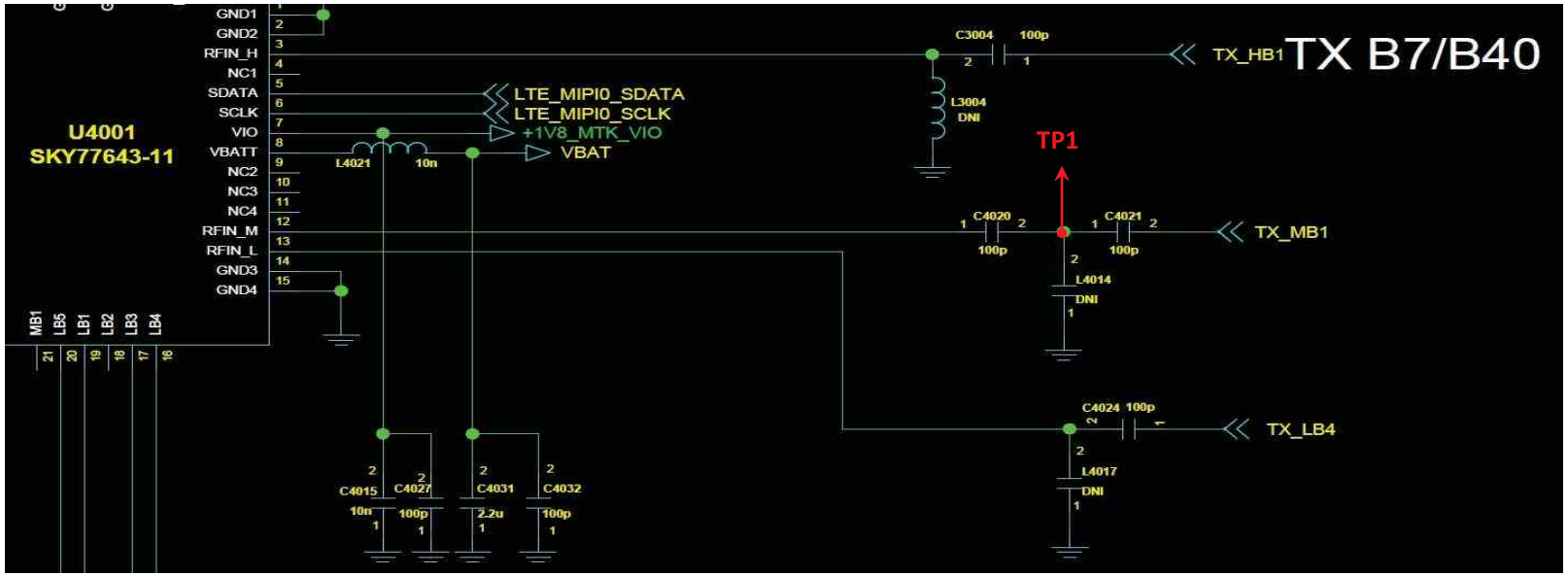




Copyright © 2016 LG Electronics. Inc. All right reserved. Only training and service purposes

## 3.7 LTE RF PART

### 3.7.13 Checking RF Signal TX path(LTE B3)

**Checking Flow**

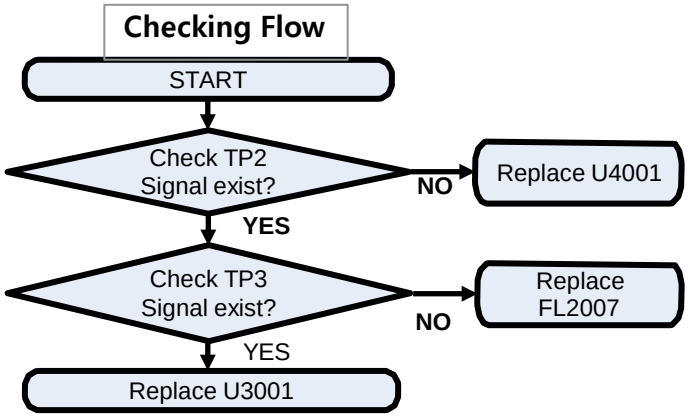


**Image**

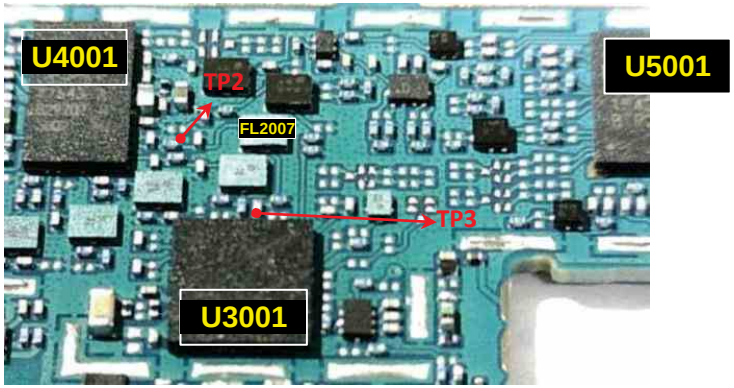


**Circuit Diagram**

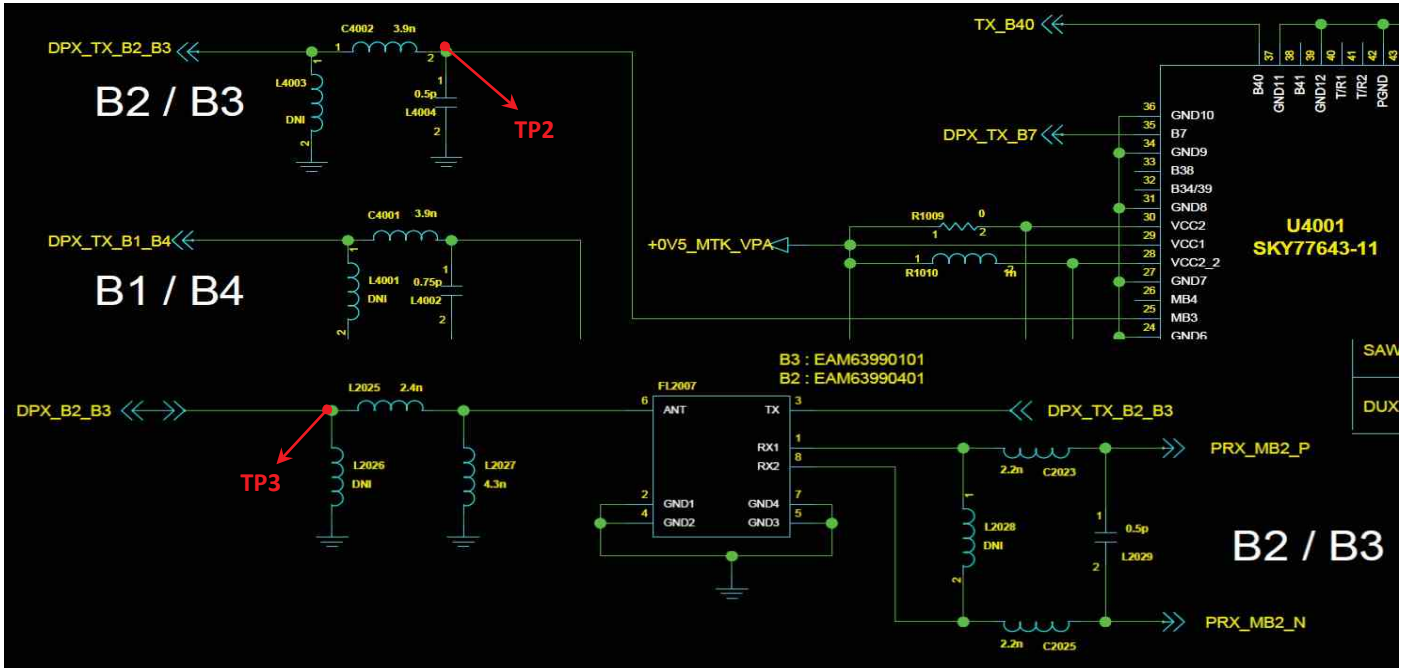



Copyright © 2016 LG Electronics. Inc. All right reserved. Only training and service purposes

## 3.7 LTE RF PART

### 3.7.14 Checking RF Signal TX path(LTE B7)

**Checking Flow**

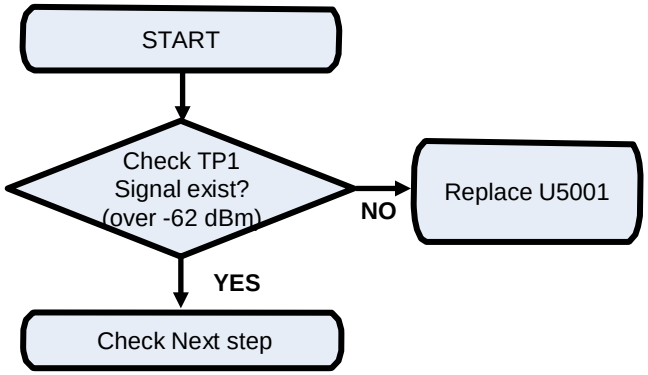


**Image**

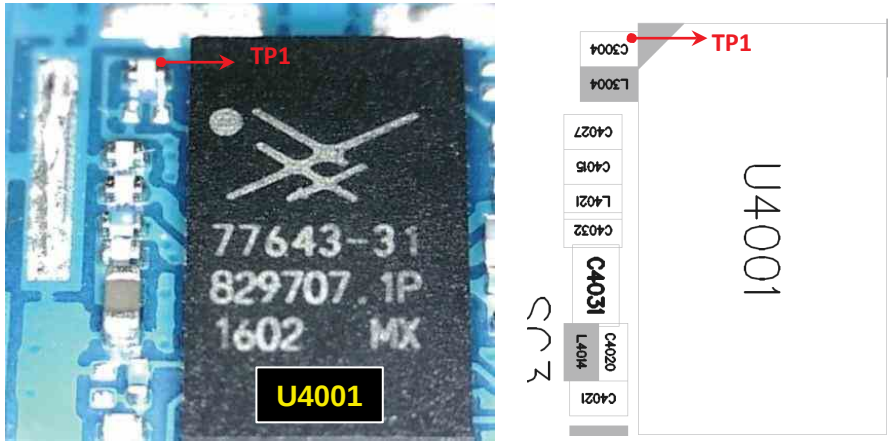


**Circuit Diagram**

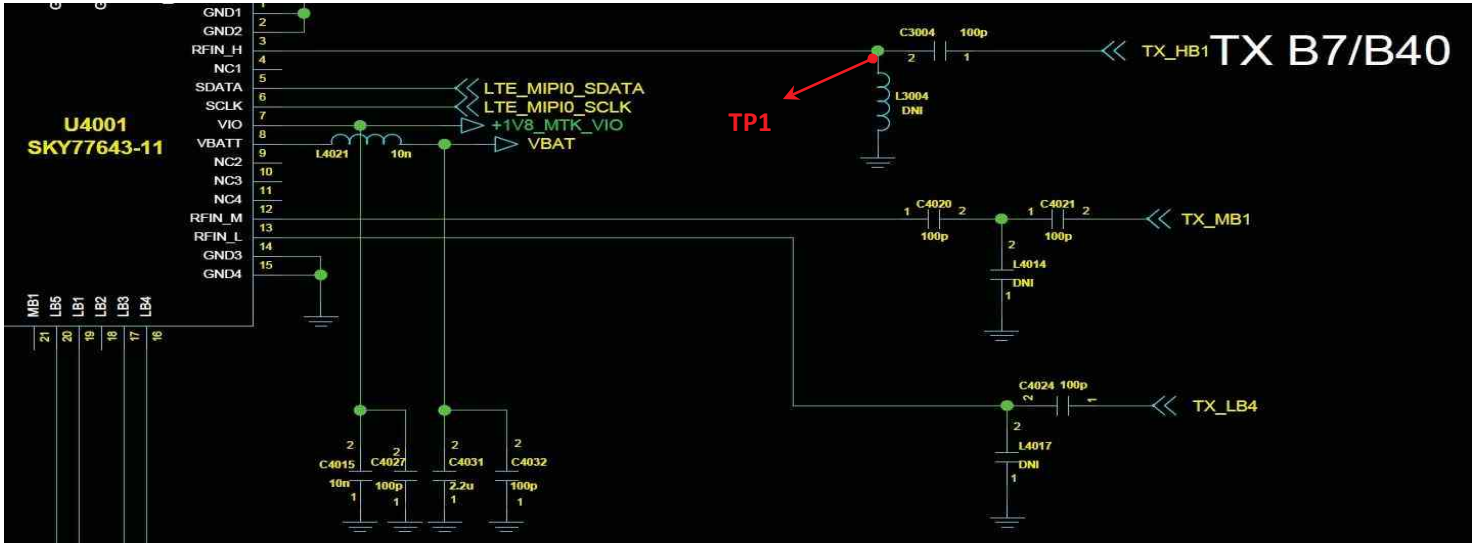



Copyright © 2016 LG Electronics. Inc. All right reserved. Only training and service purposes

## 3.7 LTE RF PART

### 3.7.15 Checking RF Signal TX path(LTE B7)

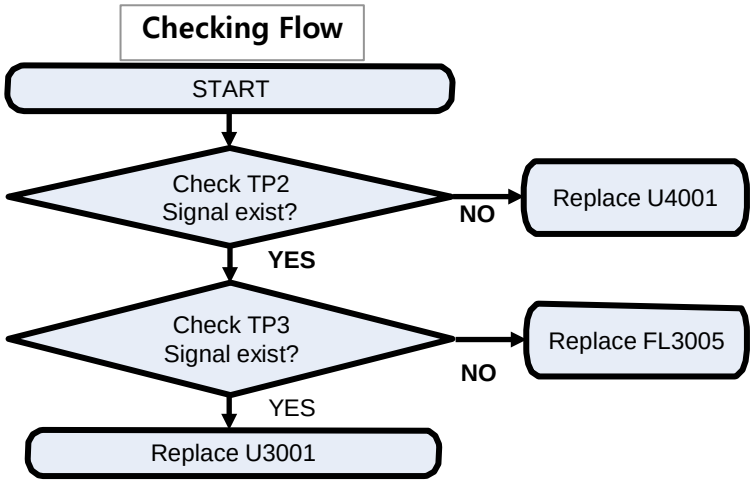


Image

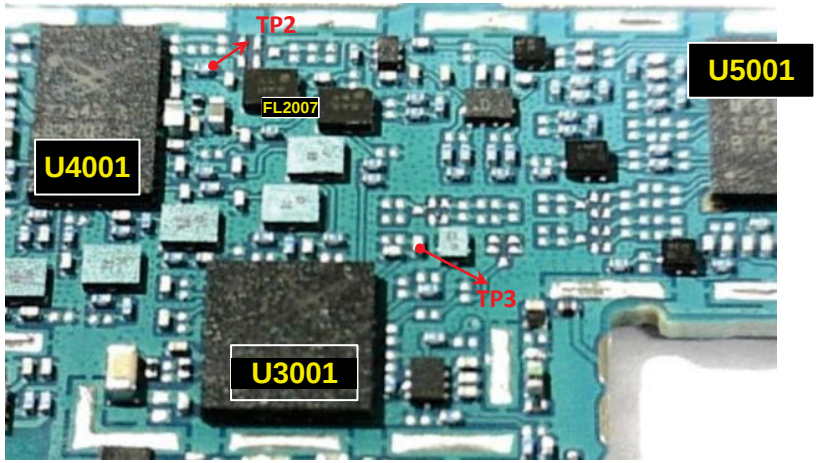


Circuit Diagram

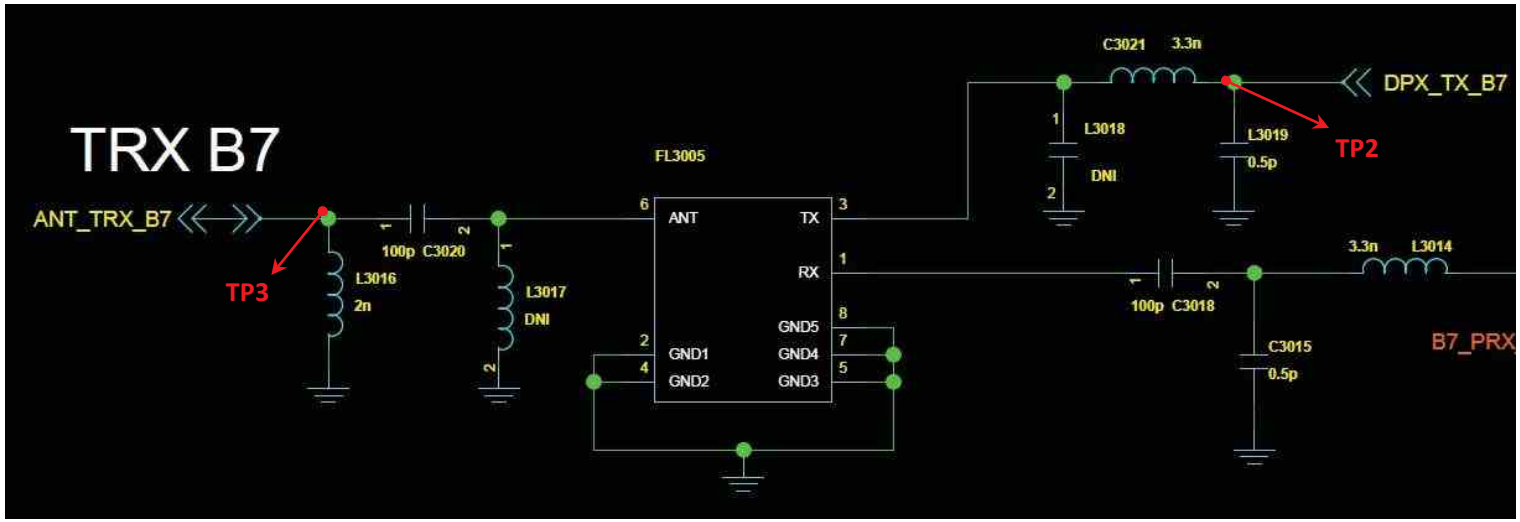



Copyright © 2016 LG Electronics. Inc. All right reserved. Only training and service purposes

## 3.7 LTE RF PART

### 3.7.16 Checking RF Signal TX path(LTE B28)

**Checking Flow**

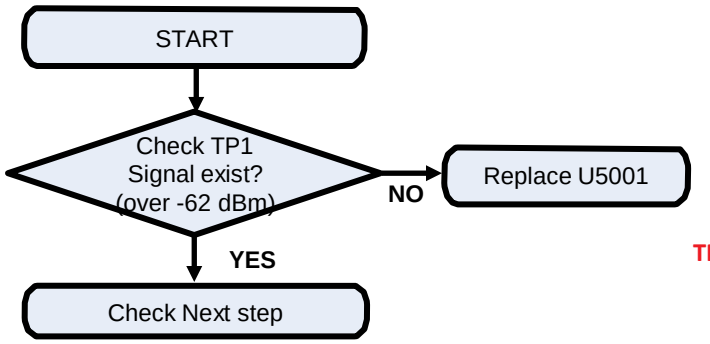


**Image**

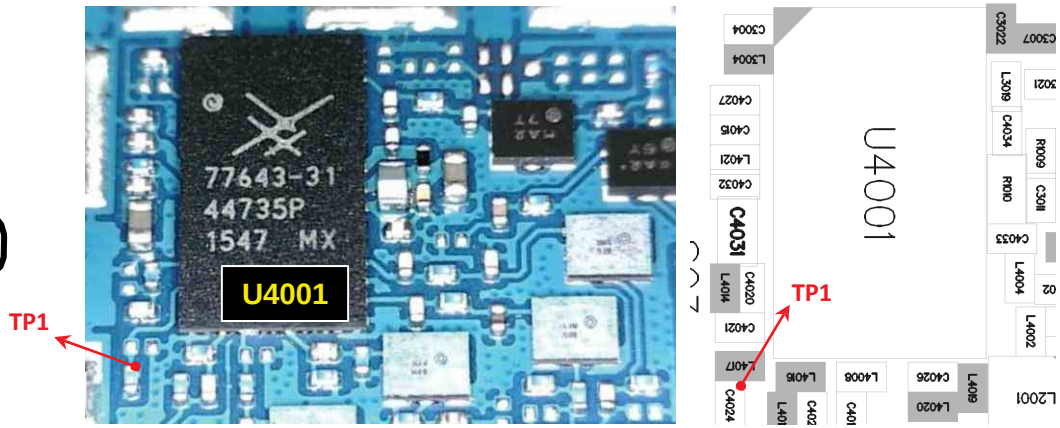


**Circuit Diagram**

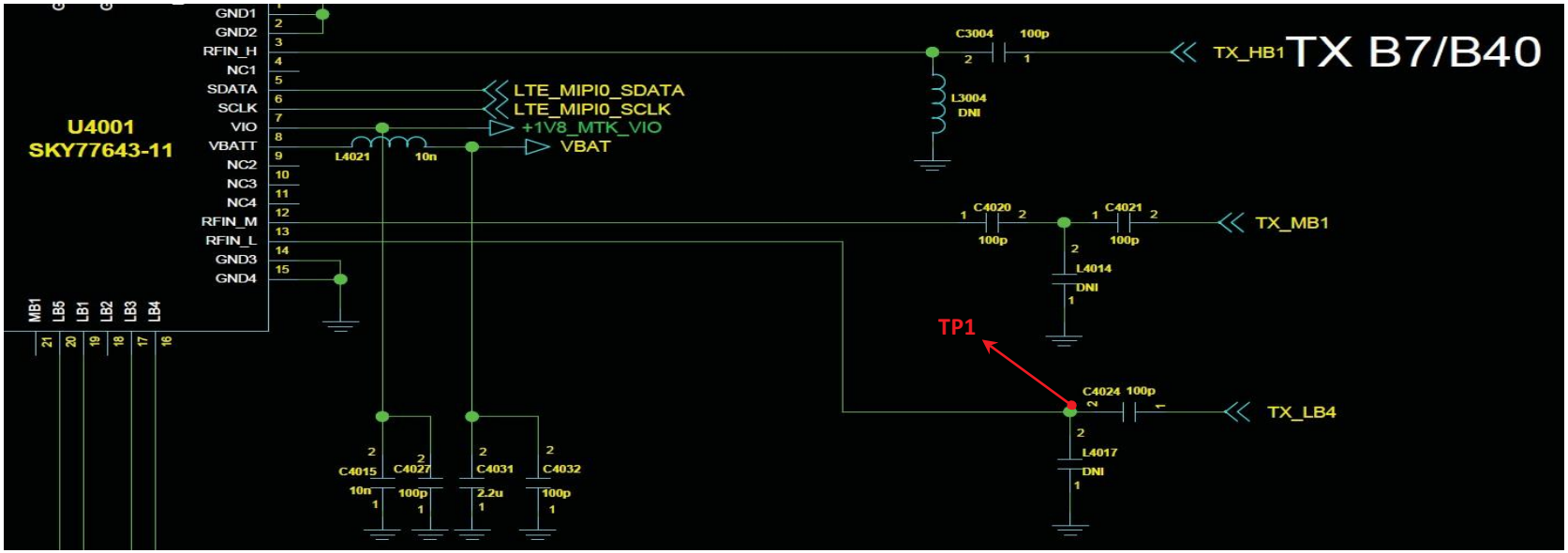




Copyright © 2016 LG Electronics. Inc. All right reserved. Only training and service purposes

## 3.7 LTE RF PART

### 3.7.17 Checking RF Signal TX path(LTE B28)

**Checking Flow**

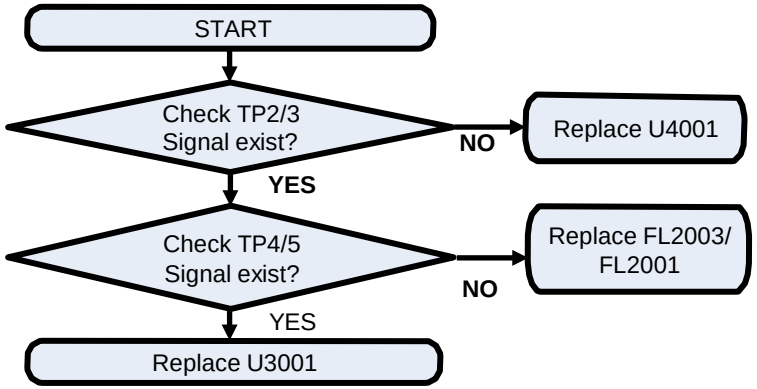


**Image**

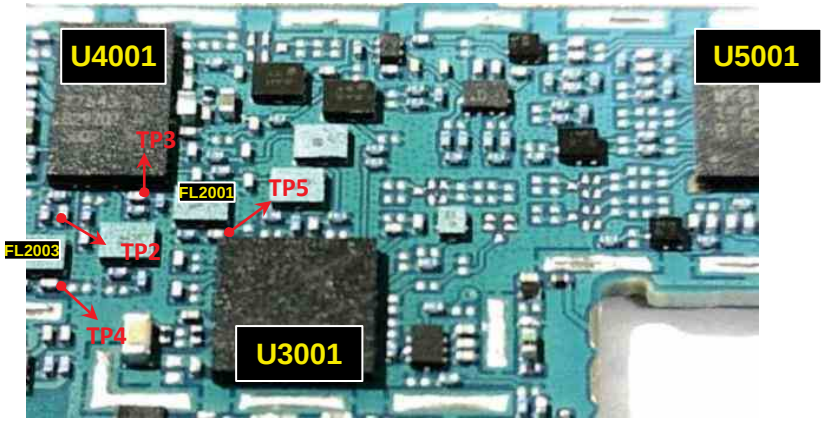


**Circuit Diagram**

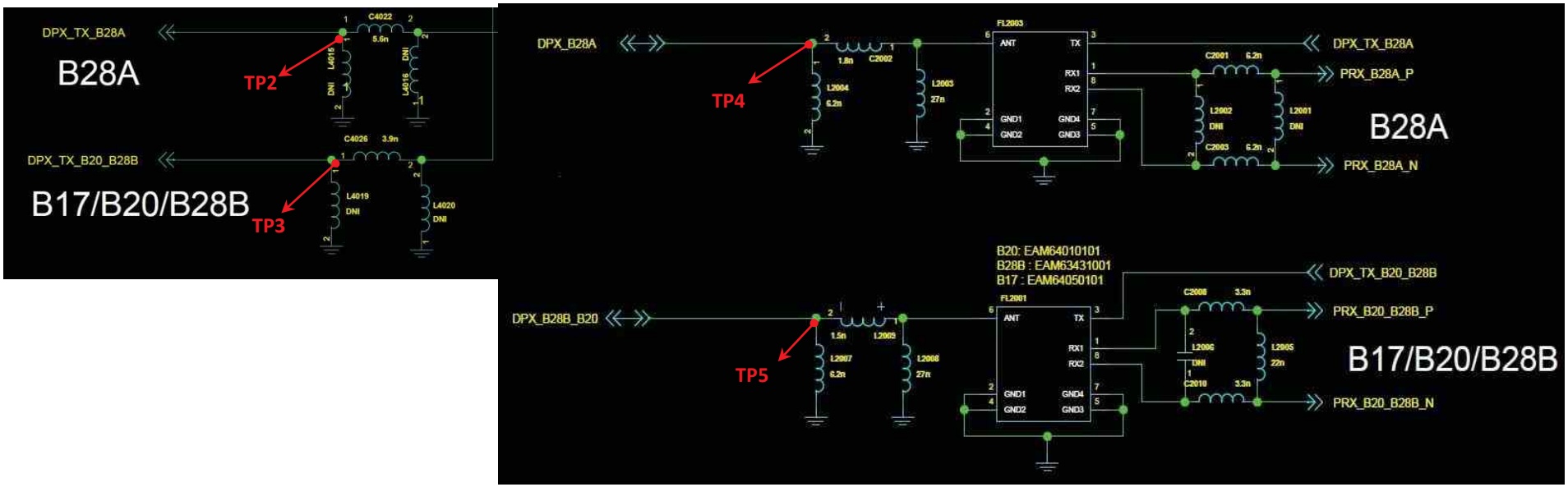




Copyright © 2016 LG Electronics. Inc. All right reserved. Only training and service purposes

## 3.8 Power

### Checking Power signal (Battery connector, Power Key, PMIC Regulator)

#### Checking Flow

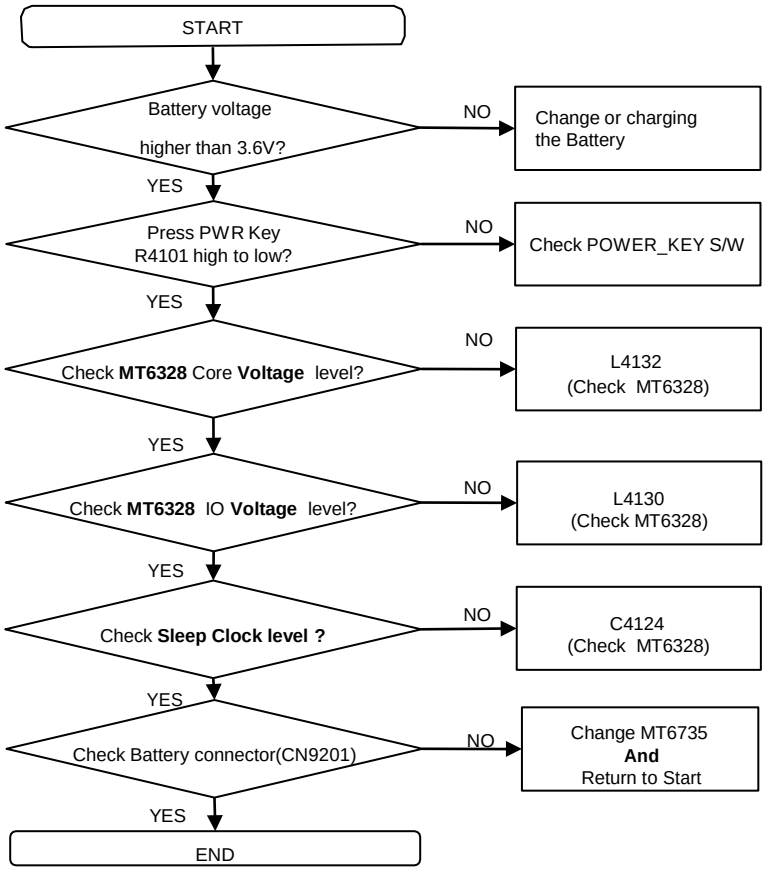


#### Image

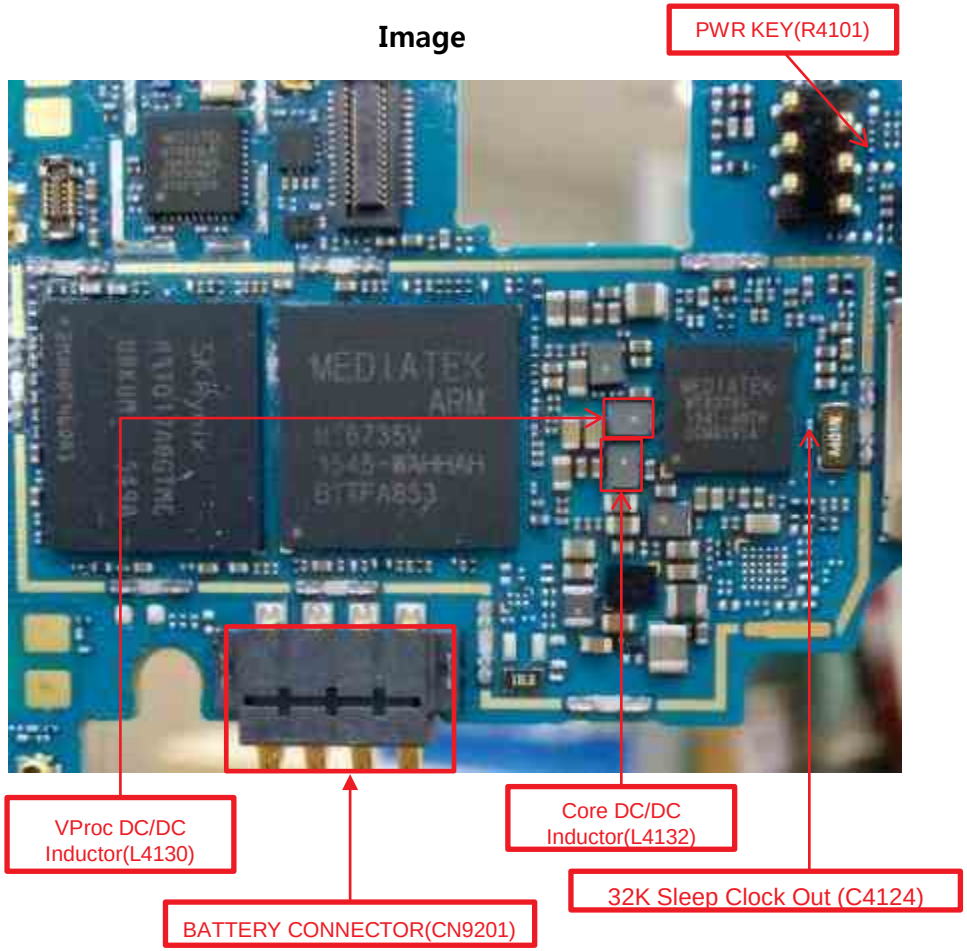




Copyright © 2015 LG Electronics. Inc. All right reserved. Only training and service purposes

## 3.8 Power

### Checking Power signal (Battery connector, Power Key, PMIC Regulator)

**Circuit Diagram**

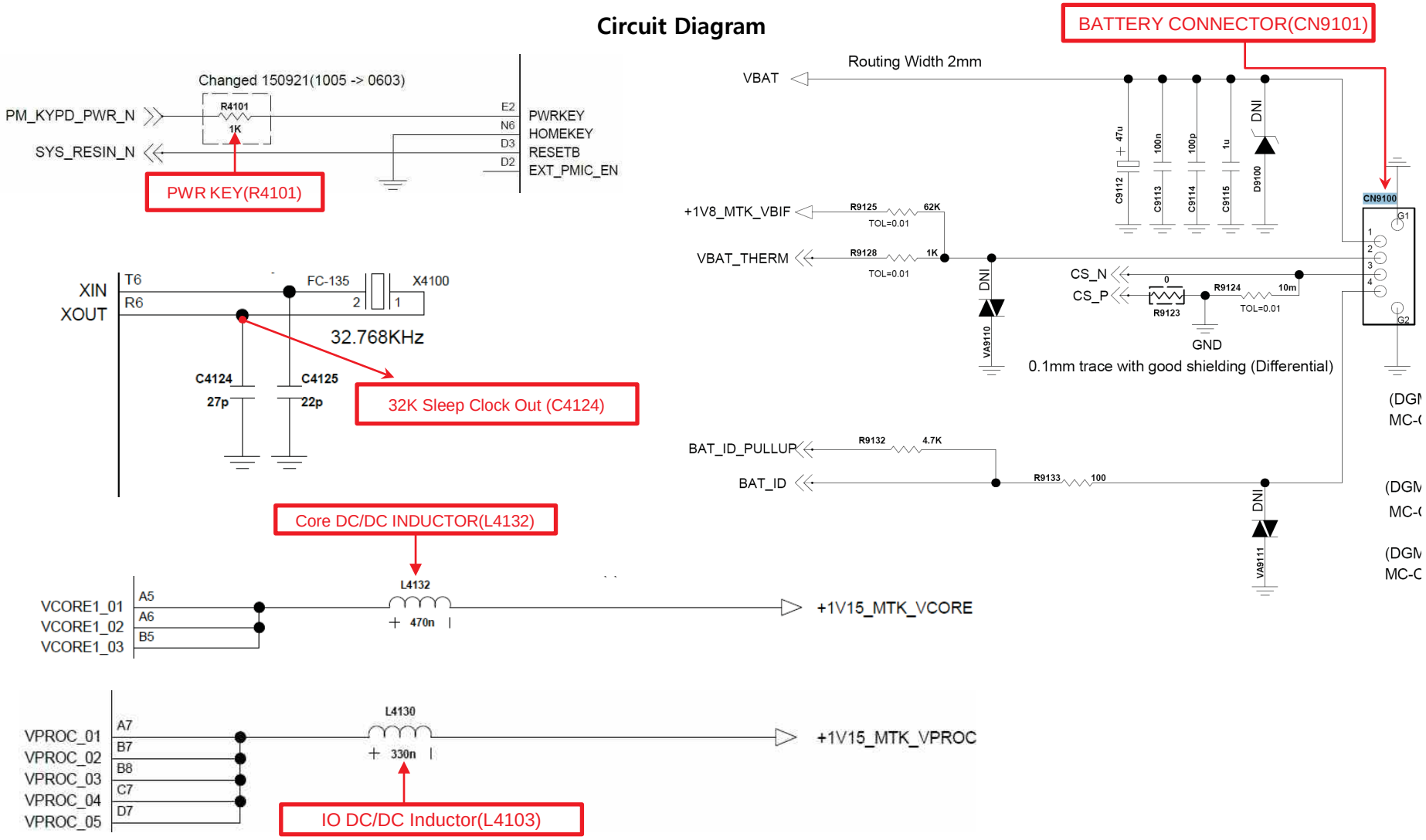




Copyright © 2015 LG Electronics. Inc. All right reserved. Only training and service purposes

## 3.9 Charger

**The I/O connector and uUSB cable voltage(5.0V) is used as the reference one of PMIC for charging.**

### Checking Flow

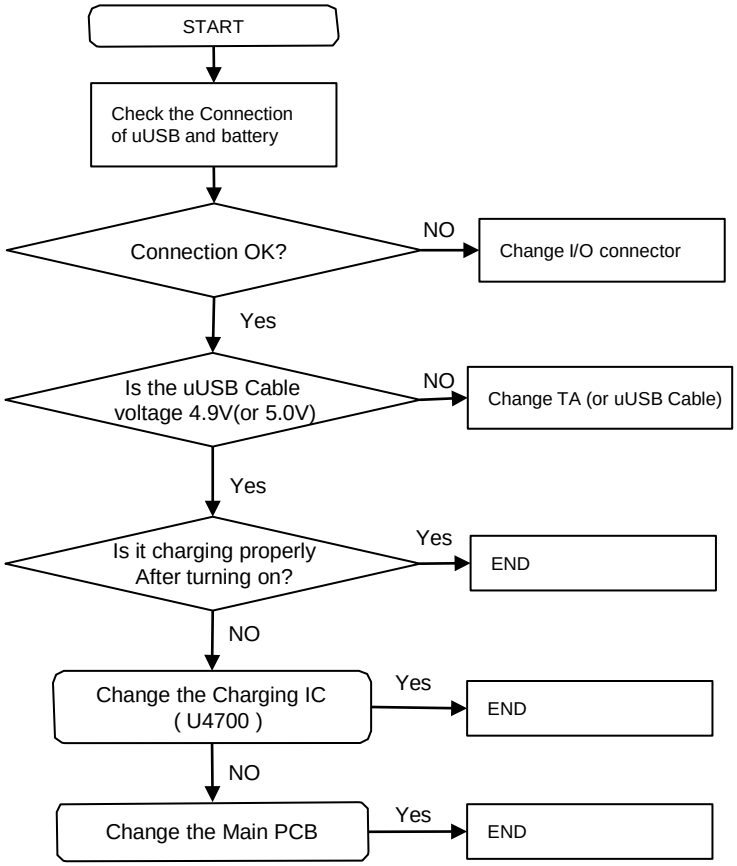


### Image

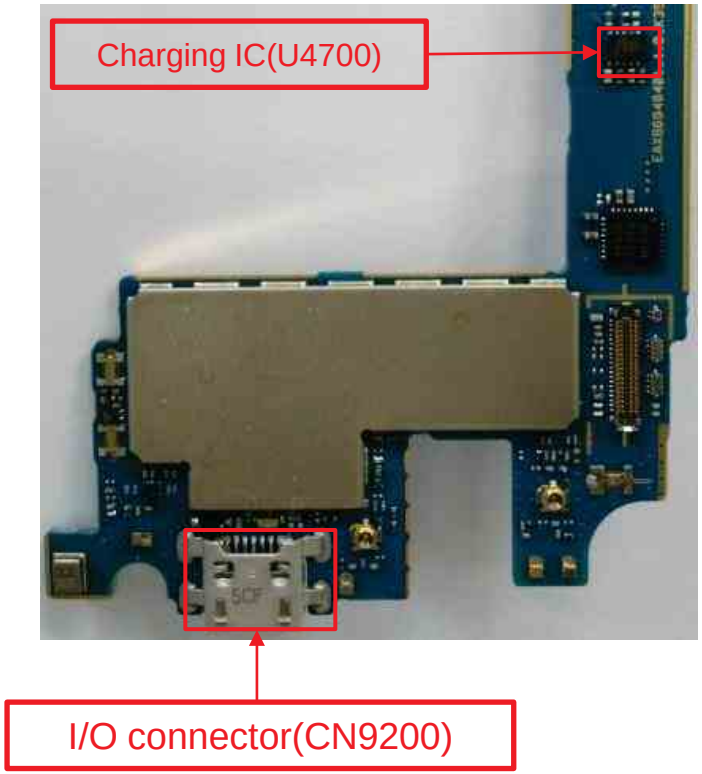




Copyright © 2015 LG Electronics. Inc. All right reserved. Only training and service purposes

## 3.10 Audio Block(3.10.1 Audio receiver)

**The receiver control signals are generated by MT6328(U4100), the MT6328 chip and the receiver are to be checked out.**

### Checking Flow

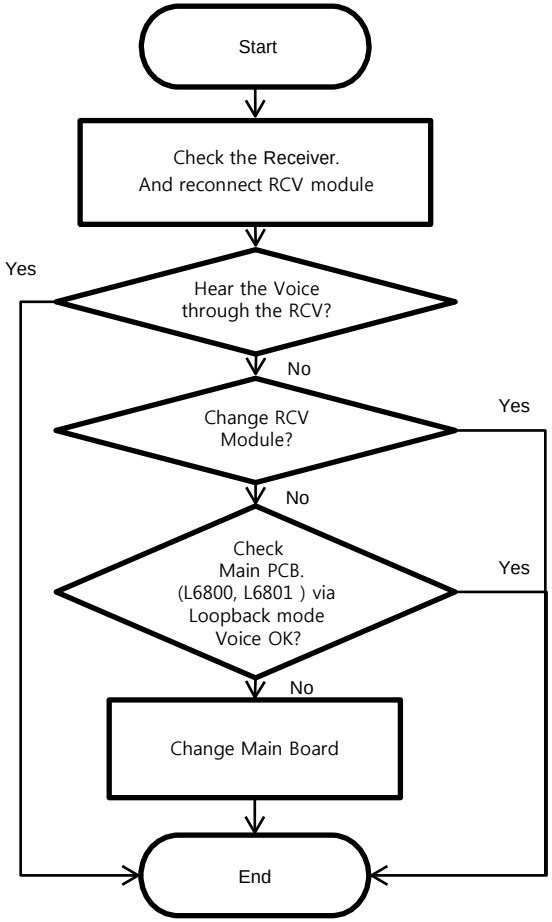


### Image

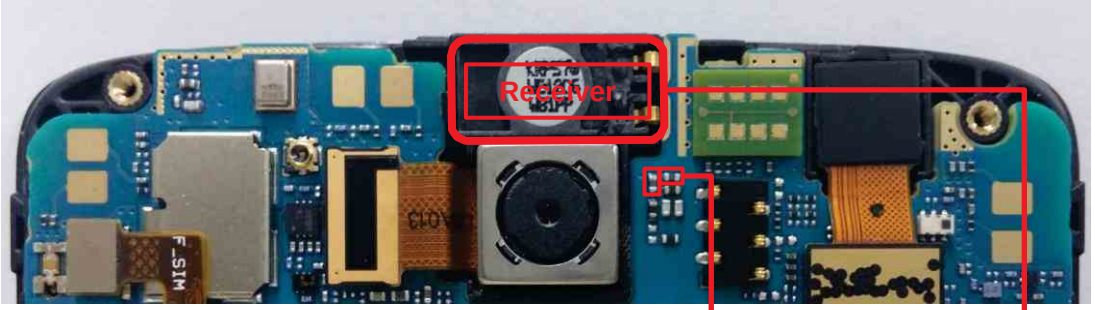


### Circuit Diagram

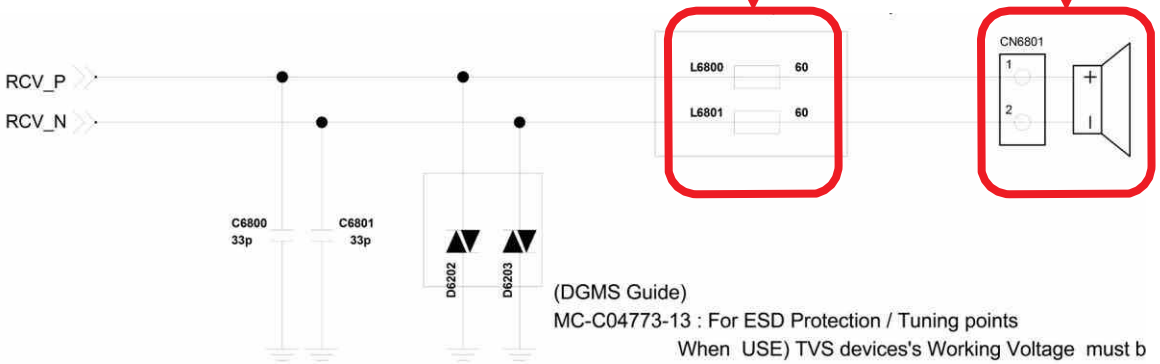




Copyright © 2015 LG Electronics. Inc. All right reserved. Only training and service purposes

### 3.10.1 Audio_speaker

**The Speaker control signals are generated by MT6328(U4100), the MT6328 chip and the speaker are to be checked out.**

**Checking Flow**

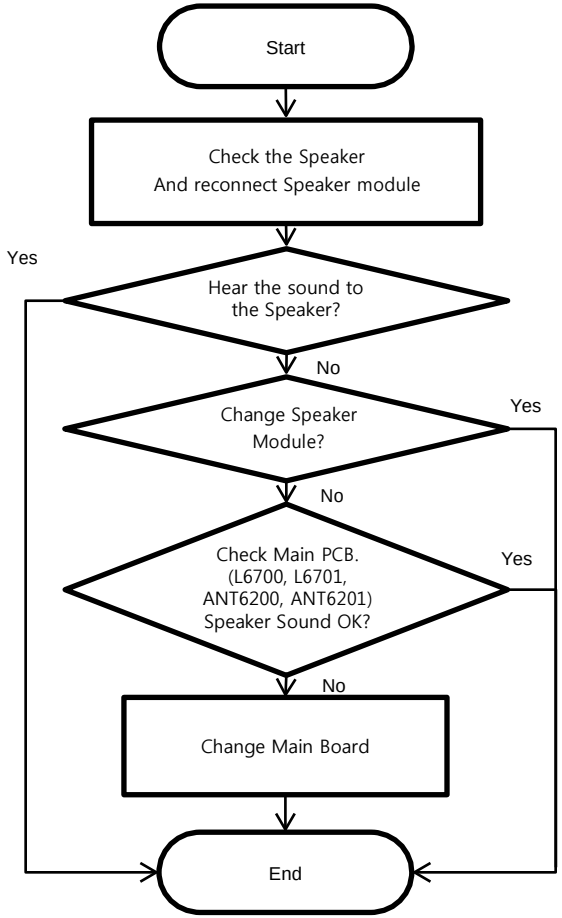


**Image**

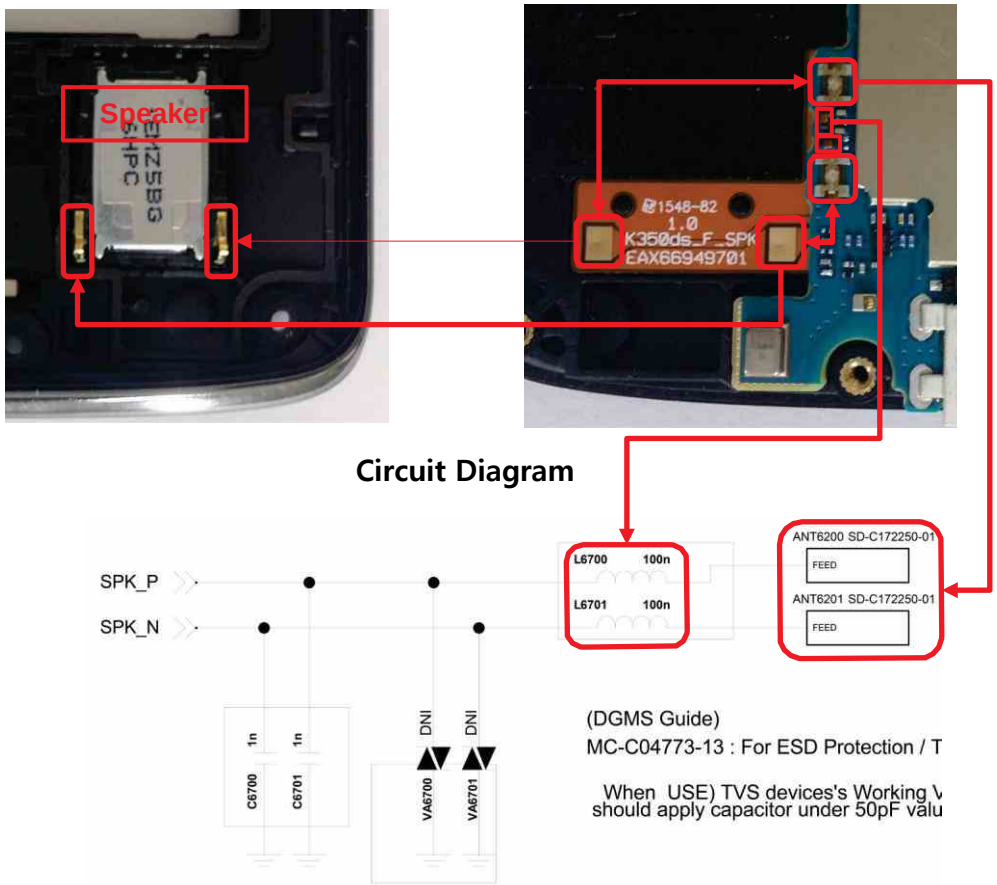




Copyright © 2015 LG Electronics. Inc. All right reserved. Only training and service purposes

### 3.10.2 Audio_Main MIC

**It's operating voice call(except speakerphone), voice recording, camcorder recording.**

**Checking Flow**

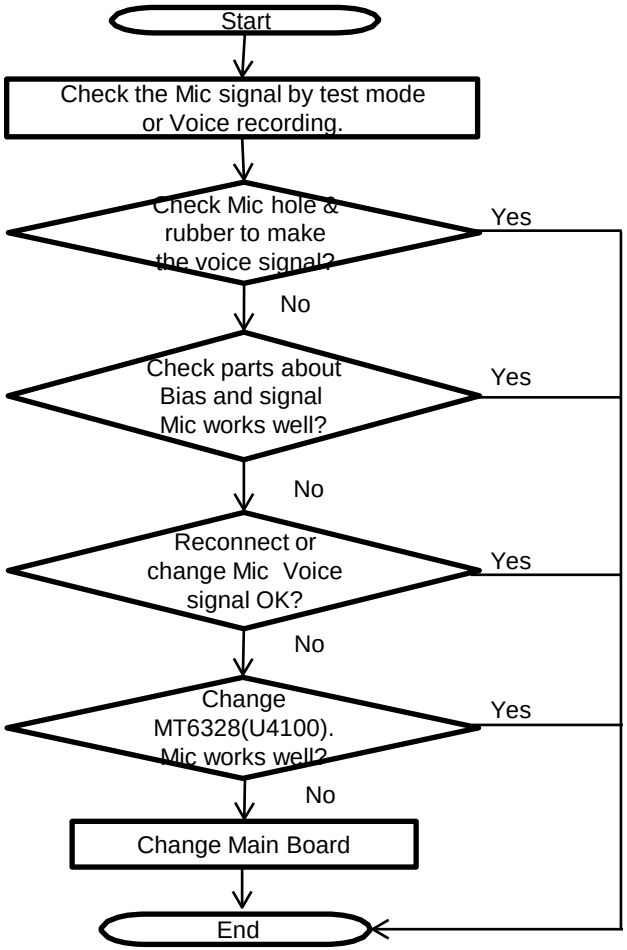


**Image**

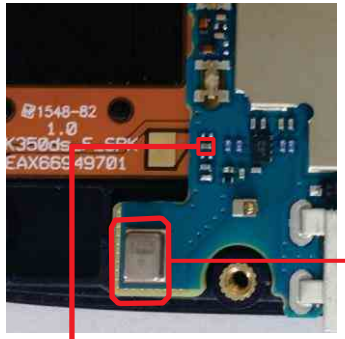

**Circuit Diagram**

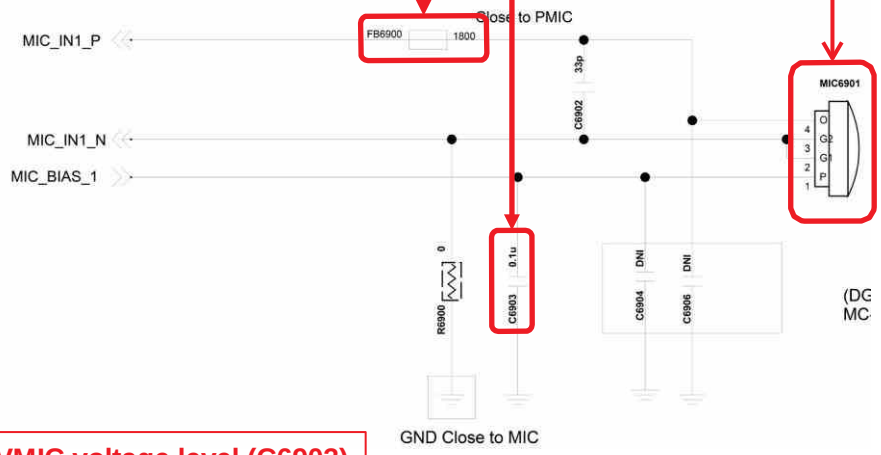


**Check FB6900, VMIC voltage level (C6903)**



Copyright © 2015 LG Electronics. Inc. All right reserved. Only training and service purposes

### 3.10.3 Audio_sub MIC

**It's operating Speakerphone call.**

**Checking Flow**

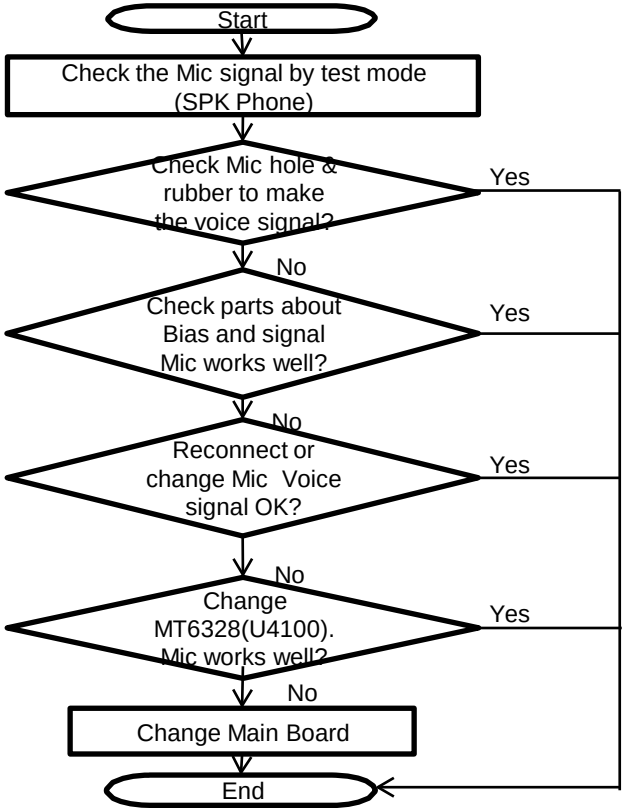


**Image**

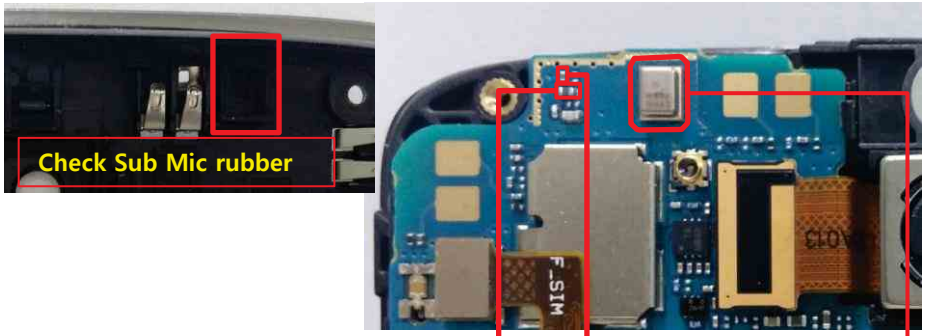


**Circuit Diagram**

**Check FB6903, , VMIC voltage level (C6910)**



Copyright © 2015 LG Electronics. Inc. All right reserved. Only training and service purposes

### 3.10.4 Audio_Ear MIC Jack

**Disable detecting headset insert or No sound from Earphone, Check the Ear Mic and MT6328**

**Checking Flow**

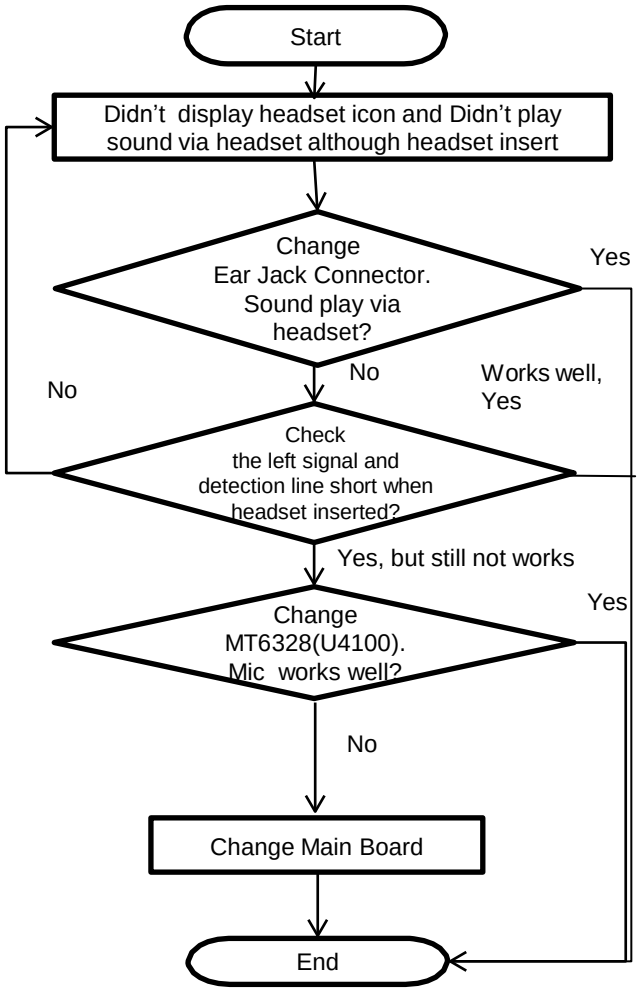


**Image**

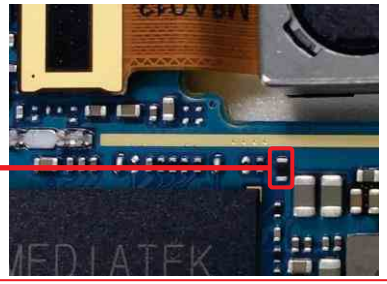

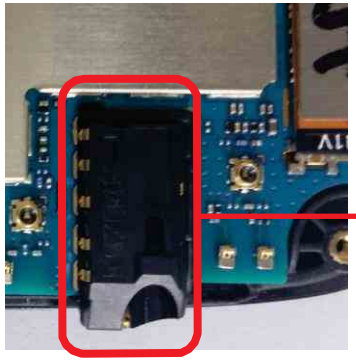

**Jack detect**
**Voltage Level Check at R6621**
**- 1.8V(before Jack)**
**- low(after Jack)**

**Circuit Diagram**

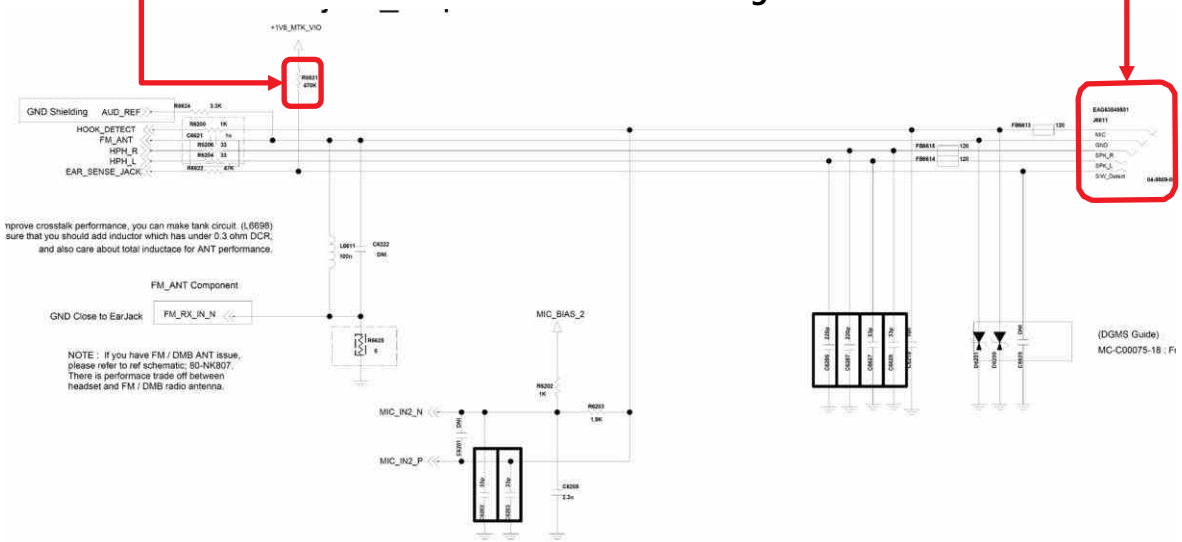




Copyright © 2015 LG Electronics. Inc. All right reserved. Only training and service purposes

### 3.10.5 FM_Radio

**Disable detecting headset insert or No FM sound from Earphone, Check the Ear Mic and MT6625L**

**Checking Flow**

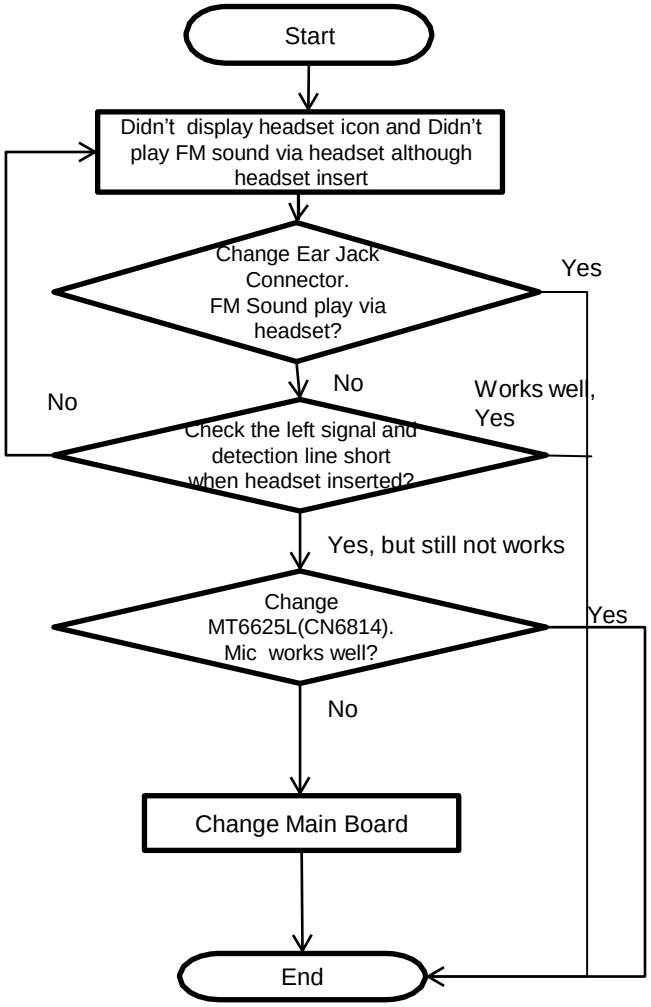


**Image**

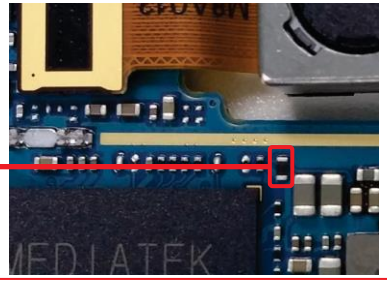

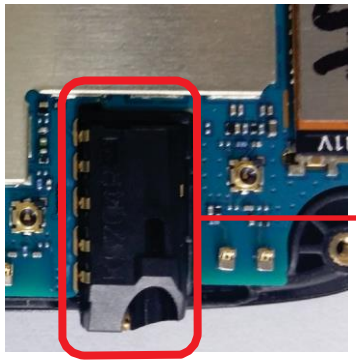

**Jack detect**
**Voltage Level Check at R6621**
**- 1.8V(before Jack)**
**- low(after Jack)**

**Circuit Diagram**

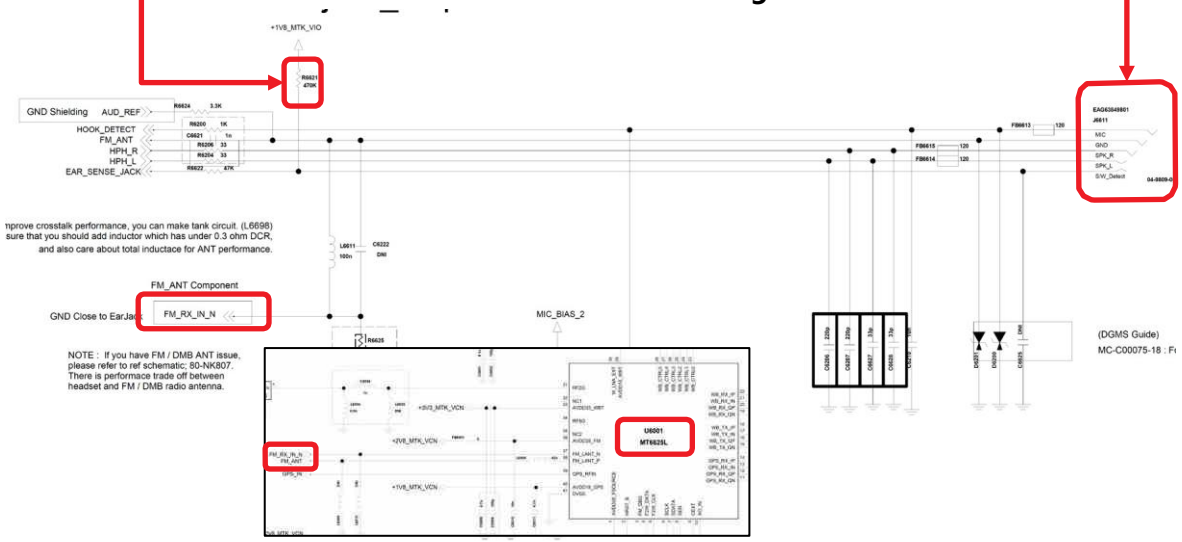




Copyright © 2015 LG Electronics. Inc. All right reserved. Only training and service purposes

### 3.11 Checking LCD Block

**The LCD control signals are generated by MT6735. Its interface is MIPI having four data lanes and one clock lane.**

**Checking Flow**

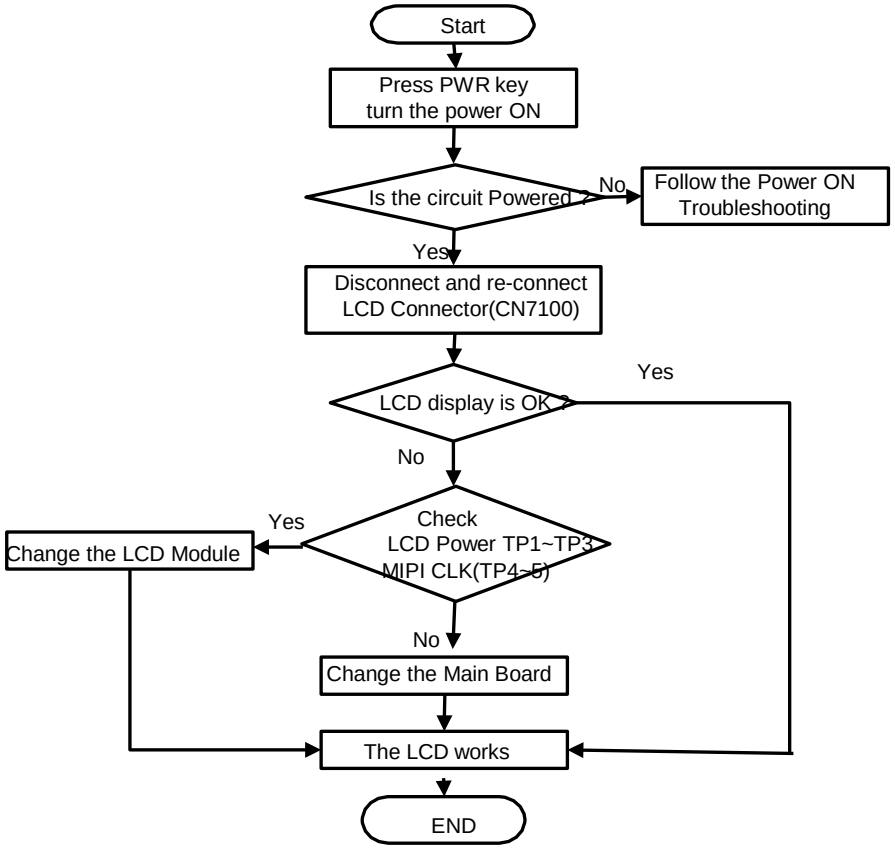


**Image**

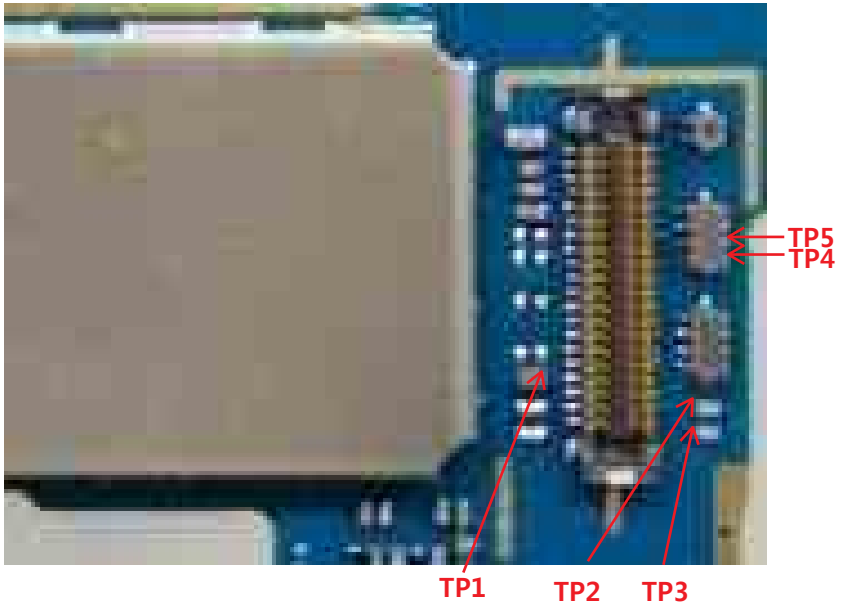




Copyright © 2015 LG Electronics. Inc. All right reserved. Only training and service purposes

### 3.11 Checking LCD Block

**The LCD control signals are generated by MT6735. Its interface is MIPI having four data lanes and one clock lane.**

**Circuit Diagram**

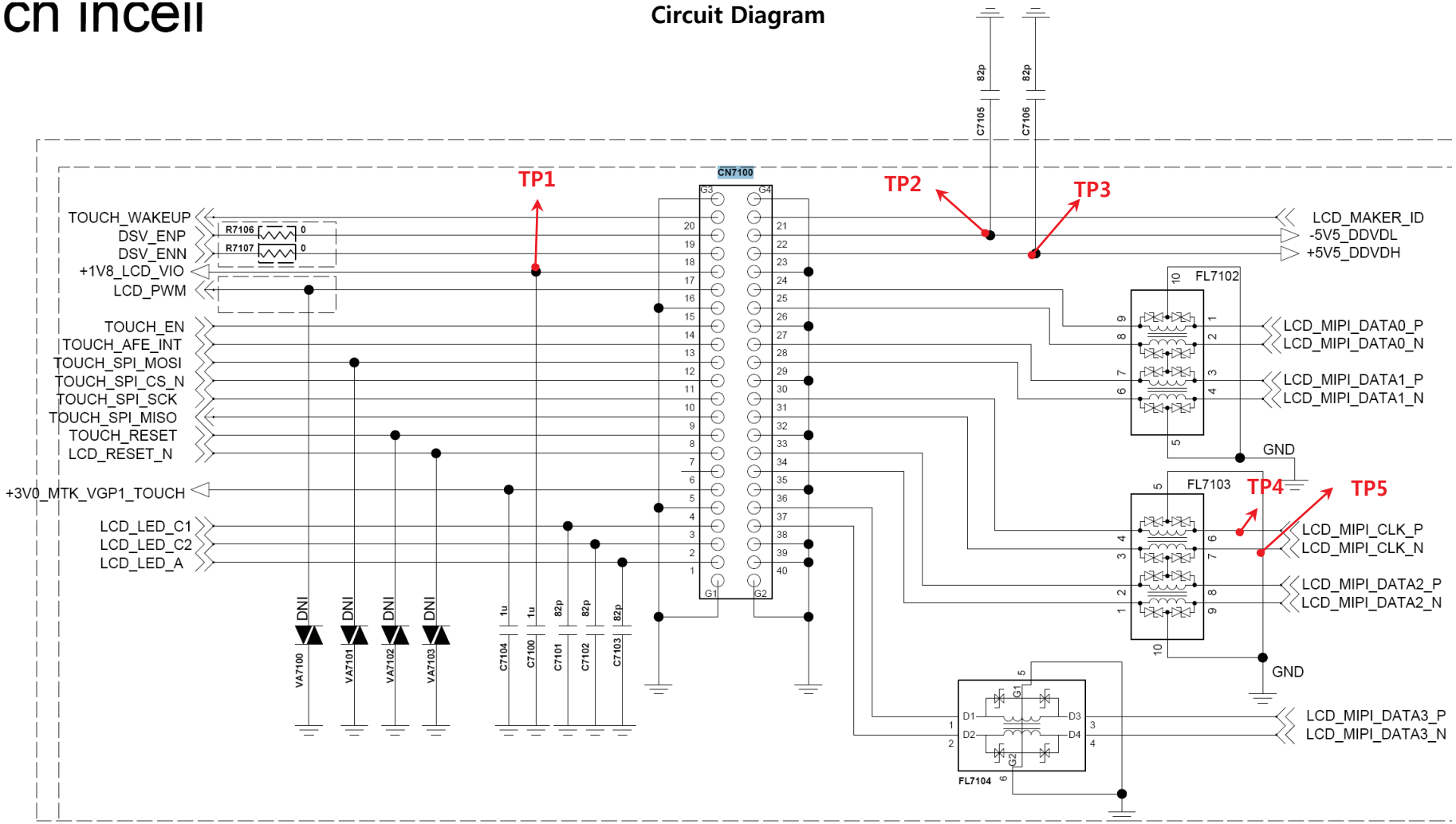




Copyright © 2015 LG Electronics. Inc. All right reserved. Only training and service purposes

## 3.12 Checking Touch Block

**The Touch control signals are generated by MT6735. It is assembled with LCD.**

### Checking Flow

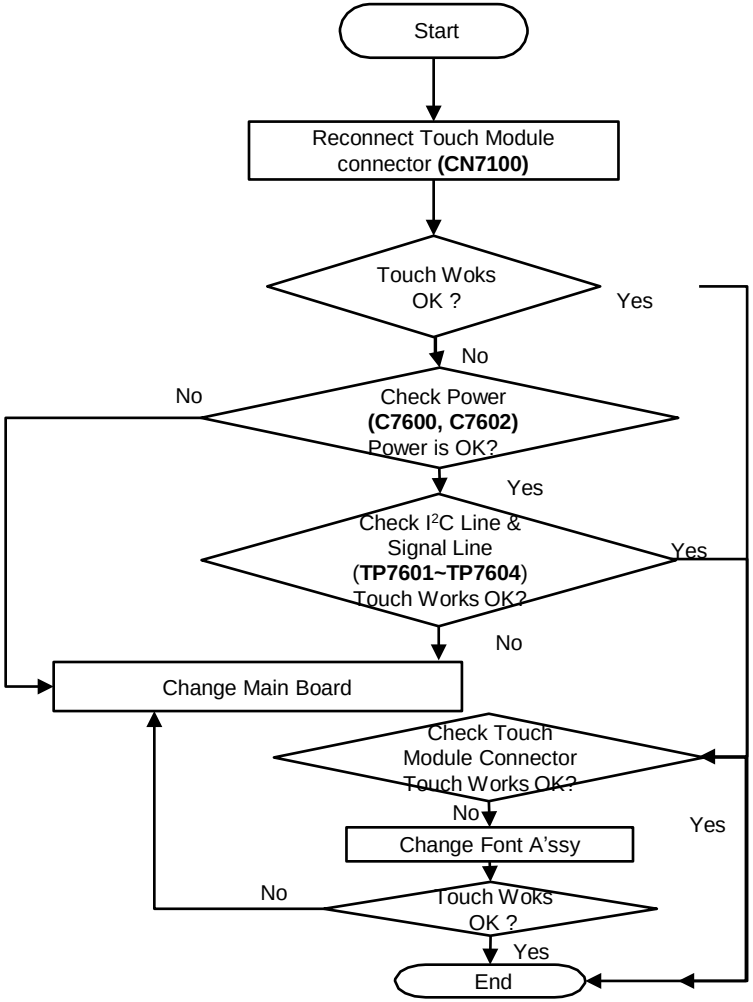


### Image

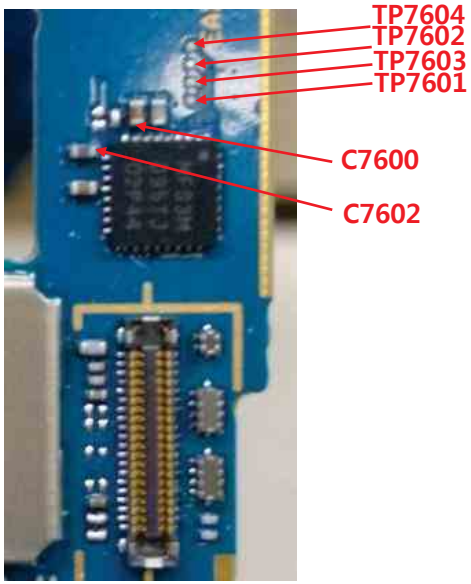


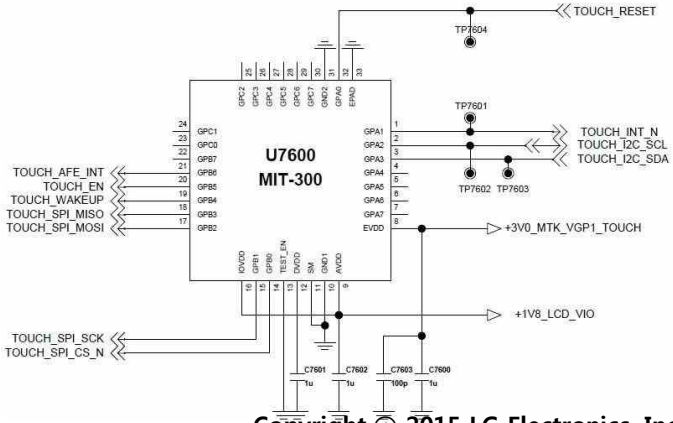




Copyright © 2015 LG Electronics. Inc. All right reserved. Only training and service purposes

## 3.13 Checking accelmeter+compass sensor Block

**The Accl. & compass sensors are calibrated by using SW algorithm.**

### Checking Flow

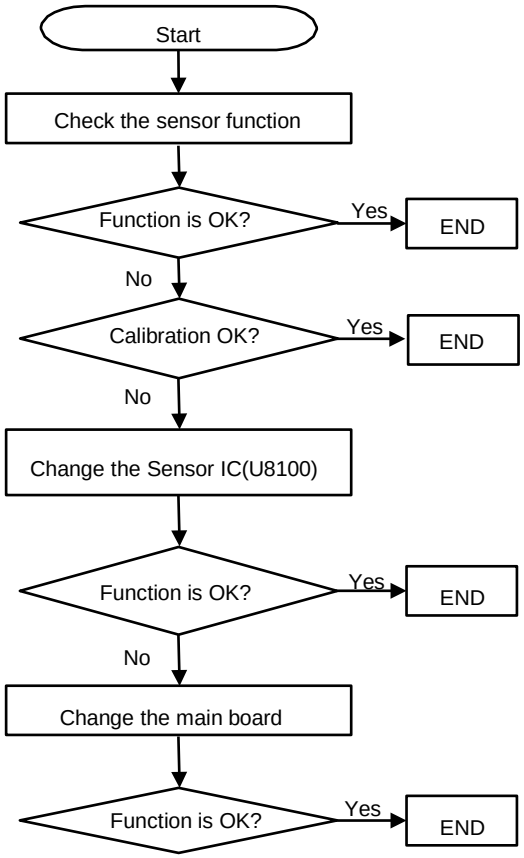


### Image

### Circuit Diagram

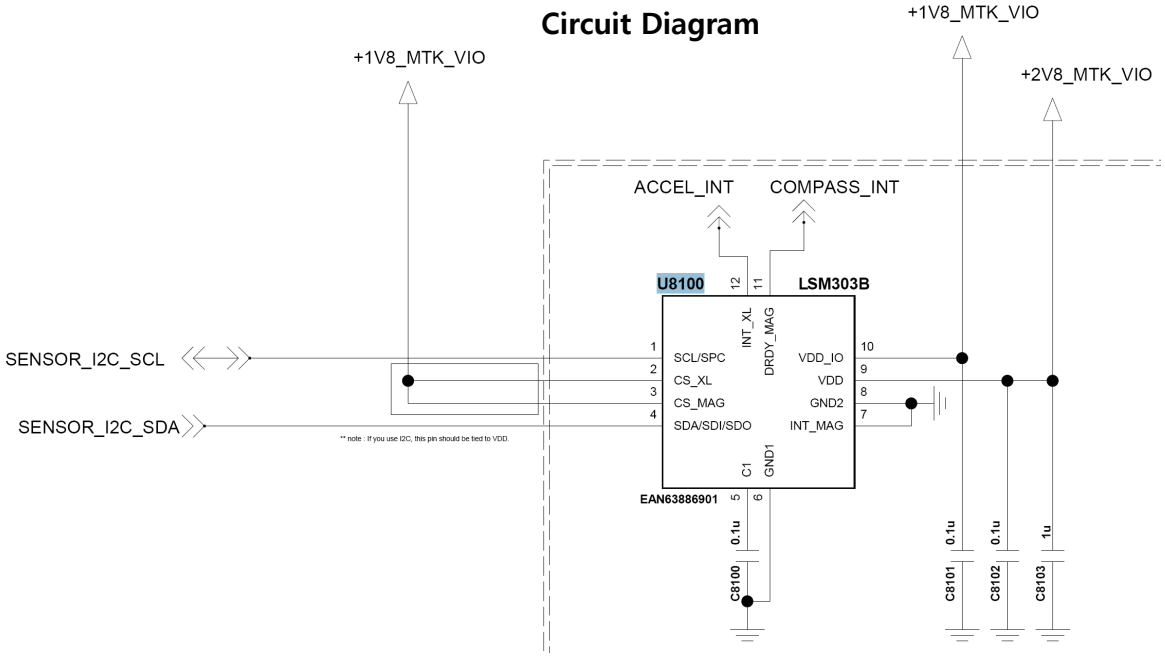




Copyright © 2015 LG Electronics. Inc. All right reserved. Only training and service purposes

## 3.13 Checking proximity sensor Block

**Proximity Sensor is worked as below: Send Key click ➔ Phone number click ➔ Call connected ➔ Object moved at the sensor ➔ Control the screen's on/off operation automatically**

### Checking Flow

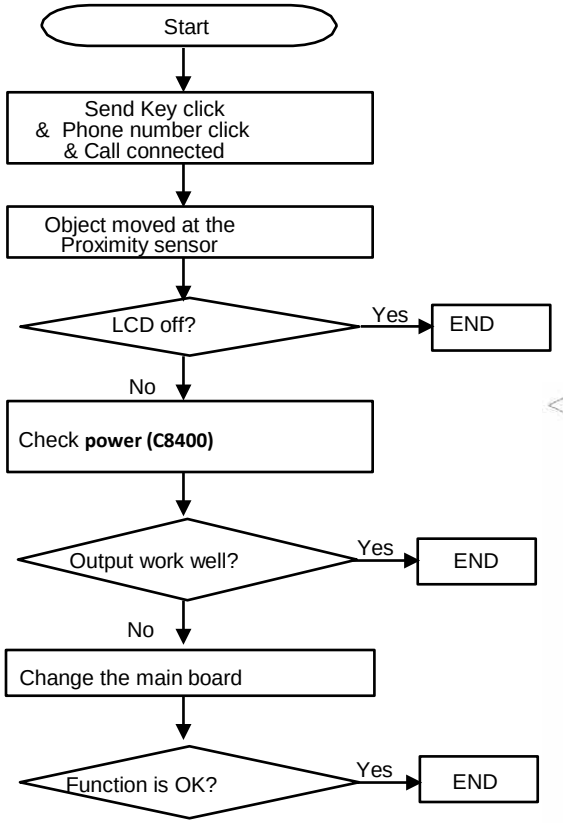


### Image

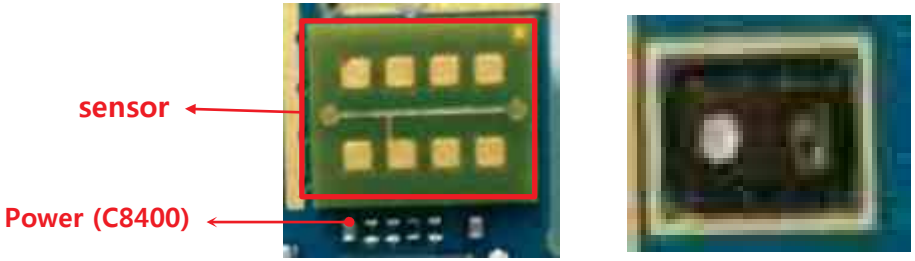


### Circuit Diagram

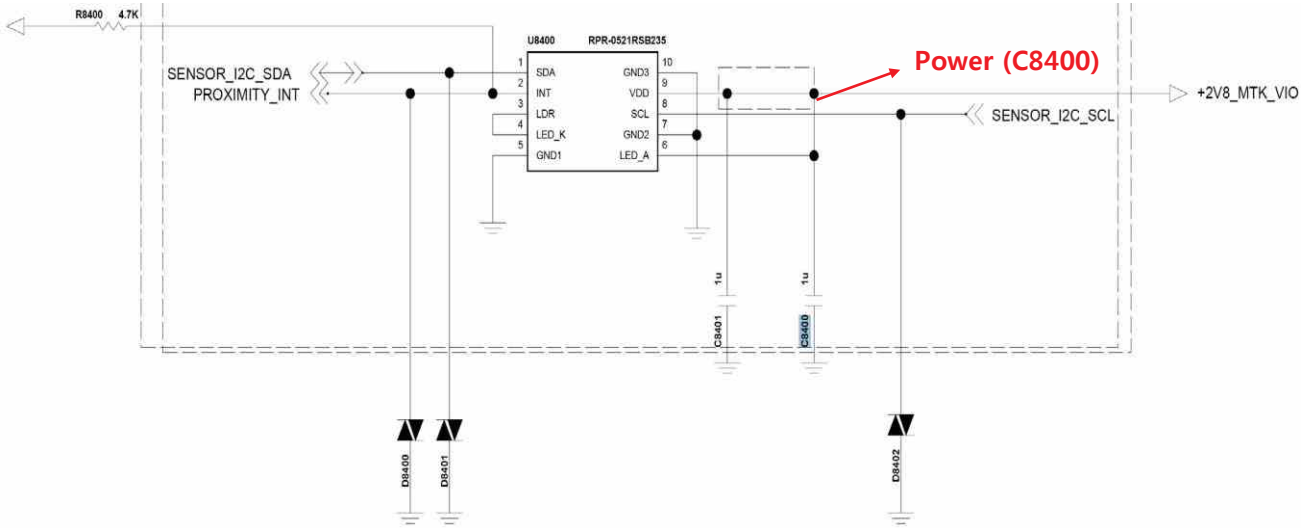




Copyright © 2015 LG Electronics. Inc. All right reserved. Only training and service purposes

## 3.14 Checking USB Block

**I/O connector is used as the USB port.**

### Checking Flow

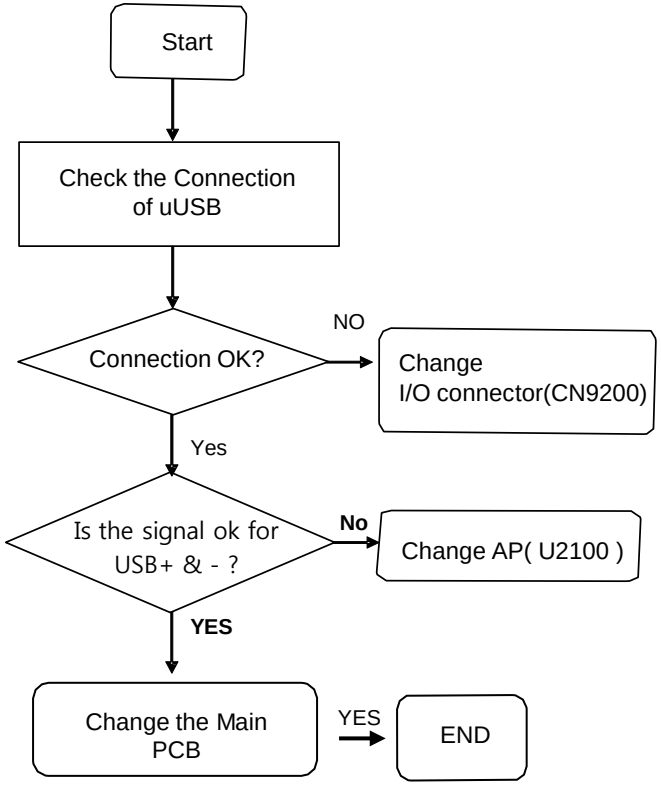


### Image

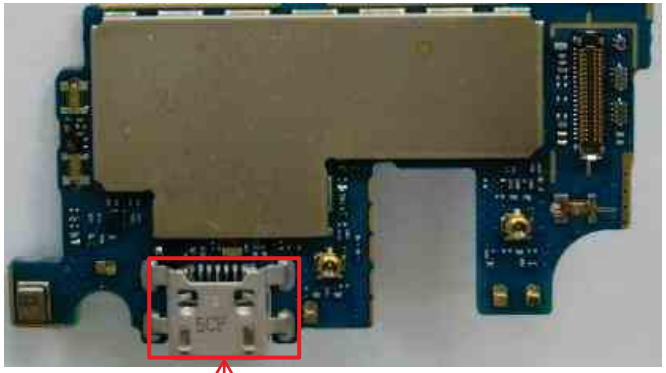

I/O connector(CN9200)

### Circuit Diagram

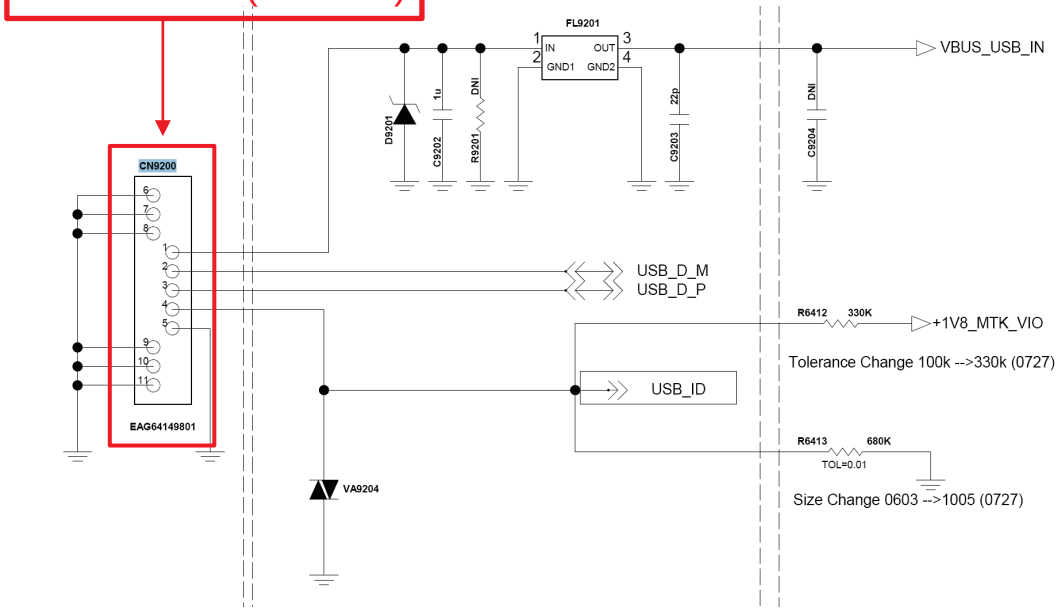




Copyright © 2015 LG Electronics. Inc. All right reserved. Only training and service purposes

## 3.15 Checking Main camera Block

**8M camera control signals are generated by MT6735 (U2100 : Main Chipset). And powered by MT6328 (U4100 : PMIC).**

### Checking Flow

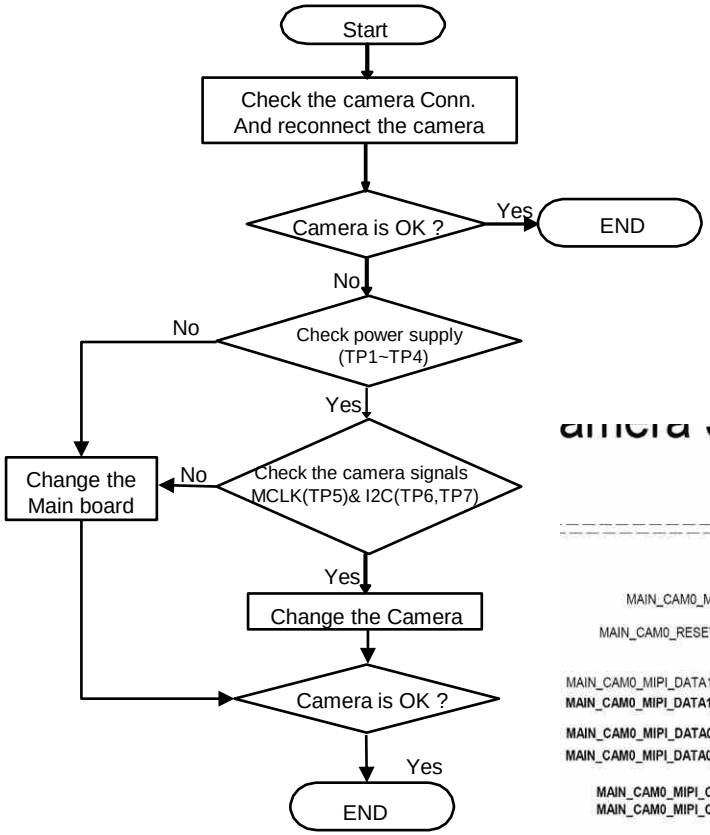


### Image

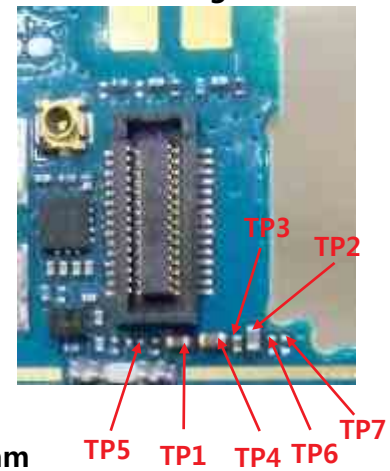


### Circuit Diagram

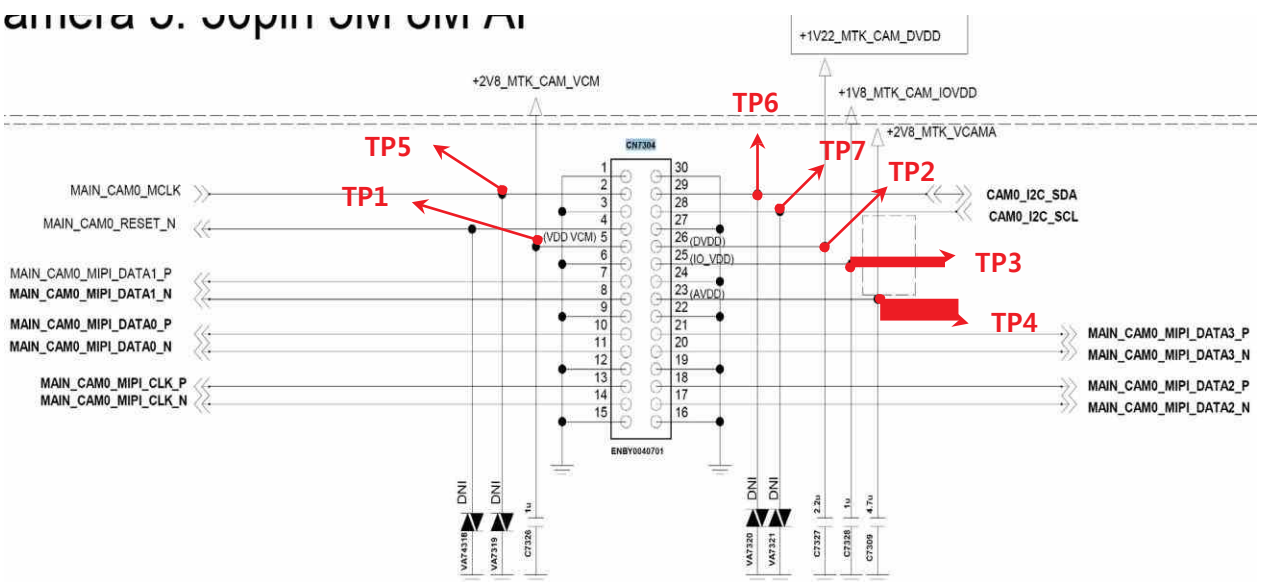




Copyright © 2015 LG Electronics. Inc. All right reserved. Only training and service purposes

## 3.15 Checking VT camera Block

**5M camera control signals are generated by MT6735 (U2100 : Main Chipset). And powered by MT6328 (U4100 : PMIC).**

### Checking Flow

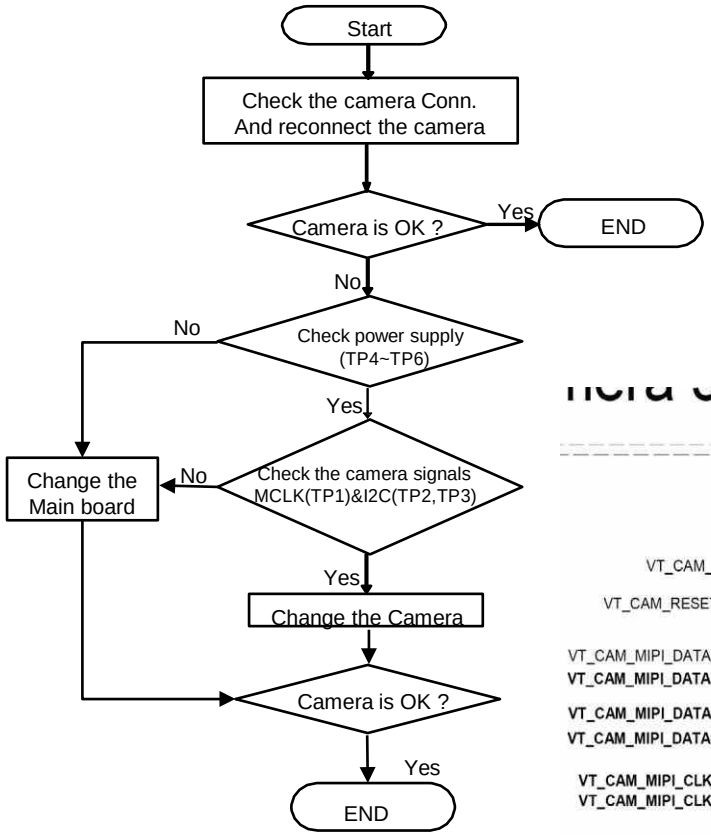


### Image

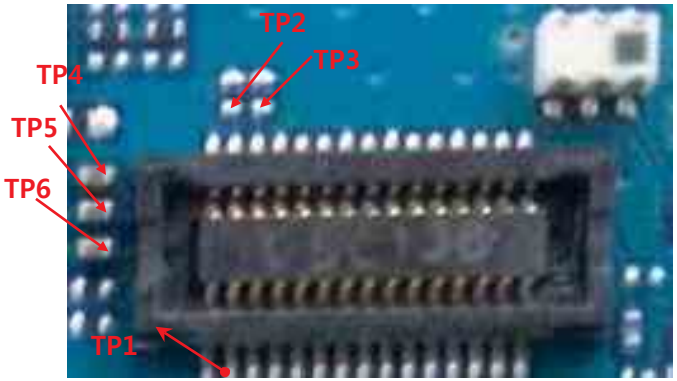


### Circuit Diagram

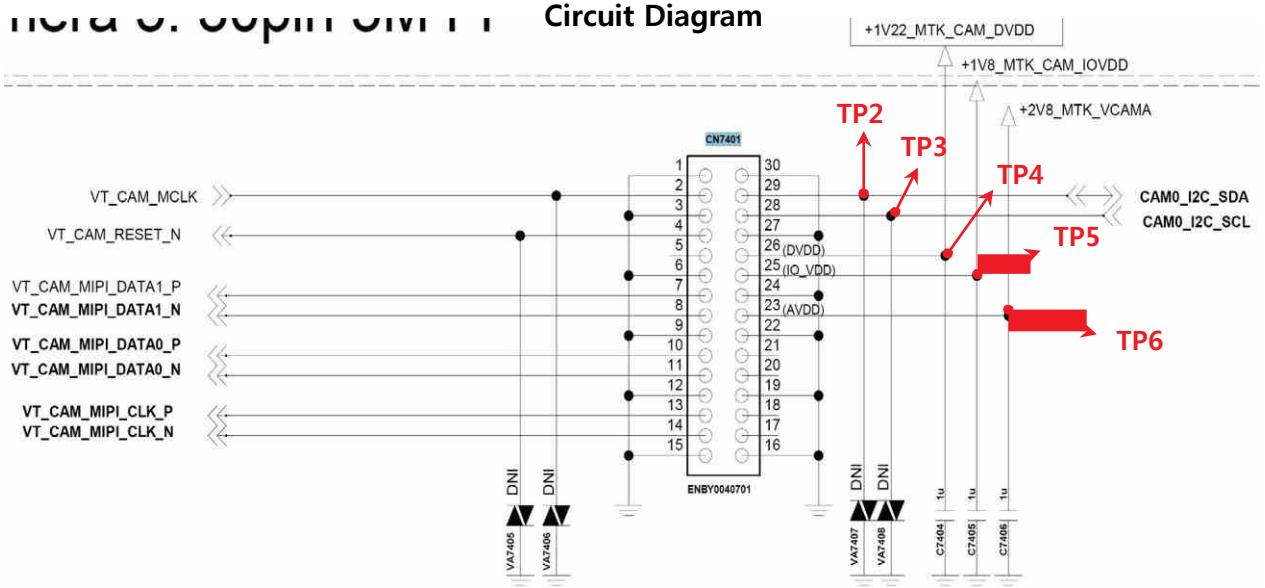




Copyright © 2015 LG Electronics. Inc. All right reserved. Only training and service purposes

## 3.16 Connectivity RF PART

### 3.16.1 Checking RF Signal TRX path(WiFi, BT)

**Checking Flow**

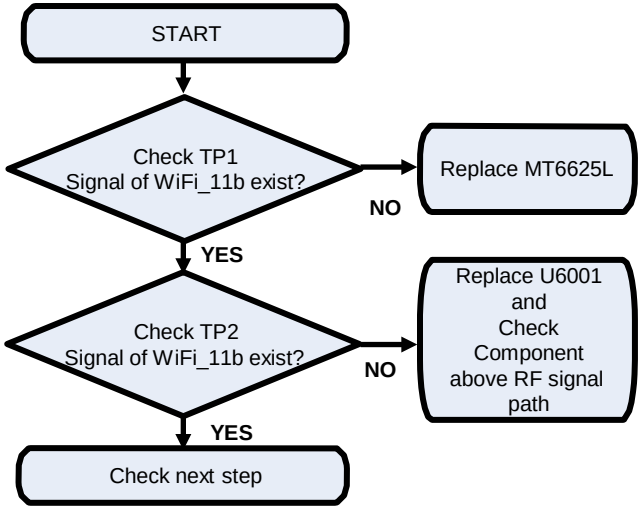


**Image**

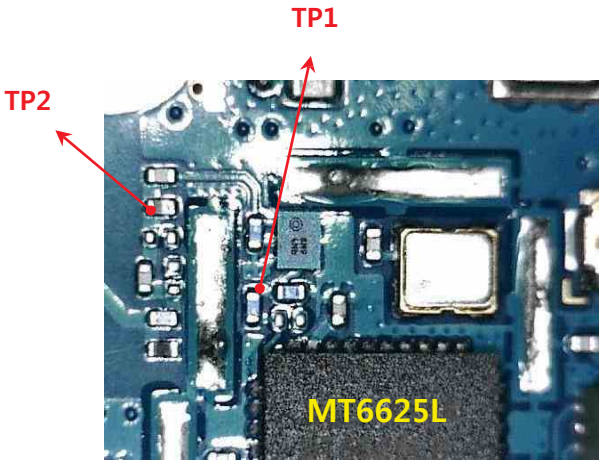


**Circuit Diagram**

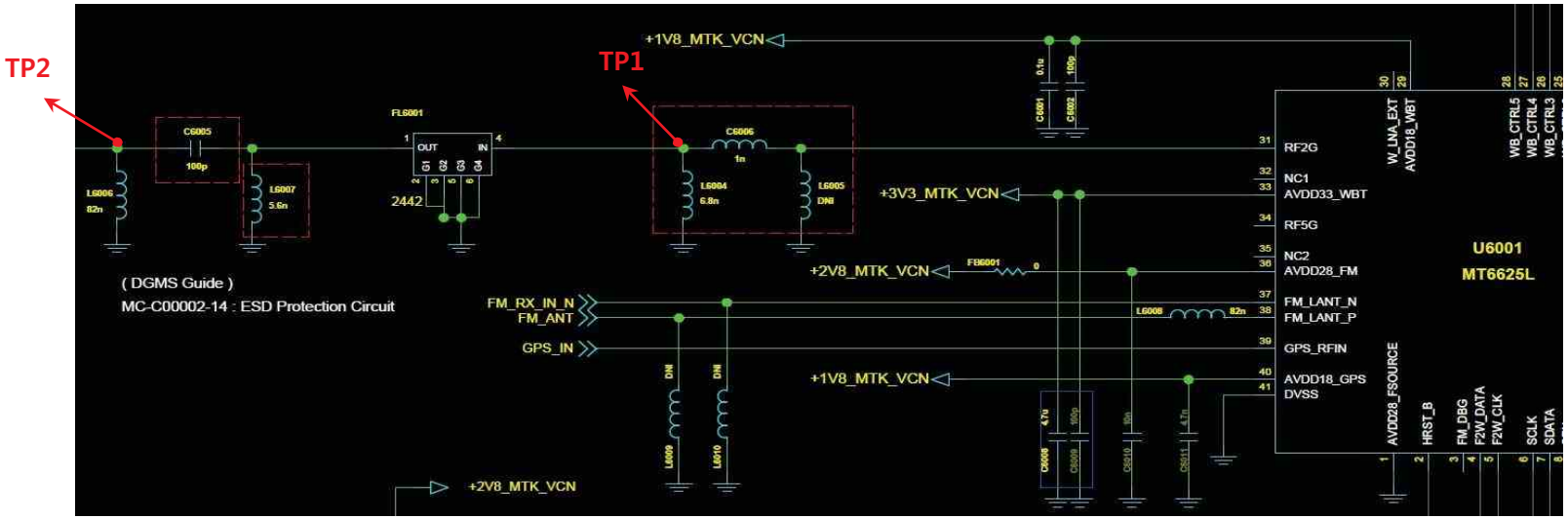



Copyright © 2015 LG Electronics. Inc. All right reserved. Only training and service purposes

## 3.16 Connectivity RF PART

### 3.16.2 Checking RF Signal TRX path(GPS)

**Checking Flow**

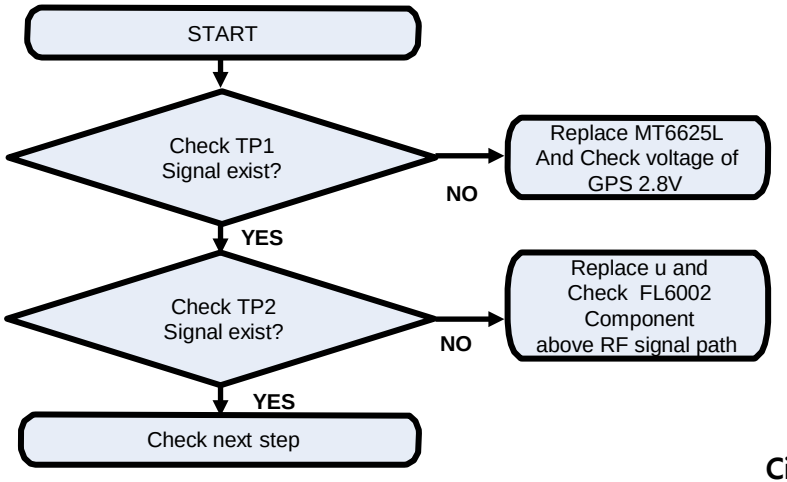


**Image**

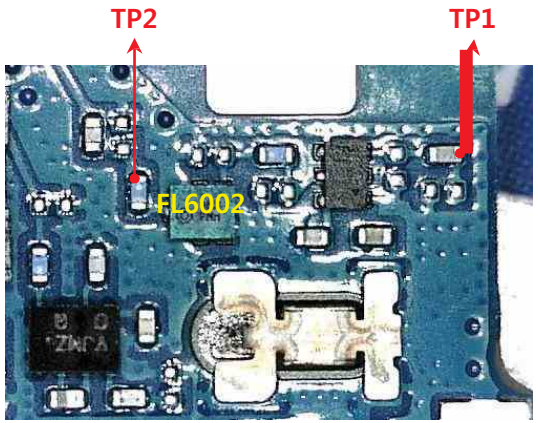


**Circuit Diagram**

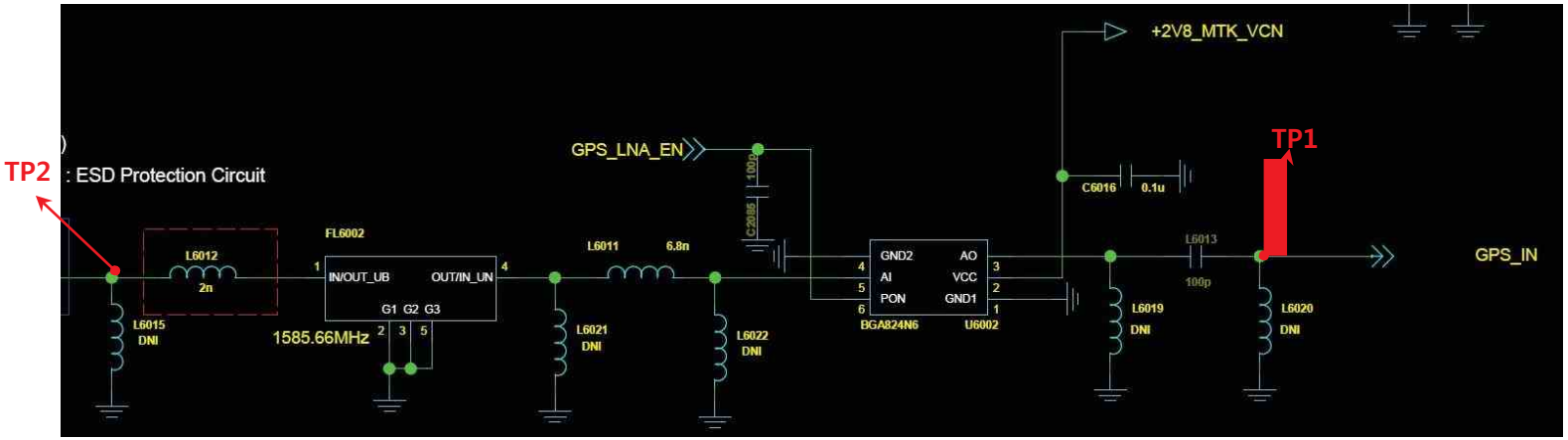



Copyright © 2015 LG Electronics. Inc. All right reserved. Only training and service purposes

## 2. RF Main

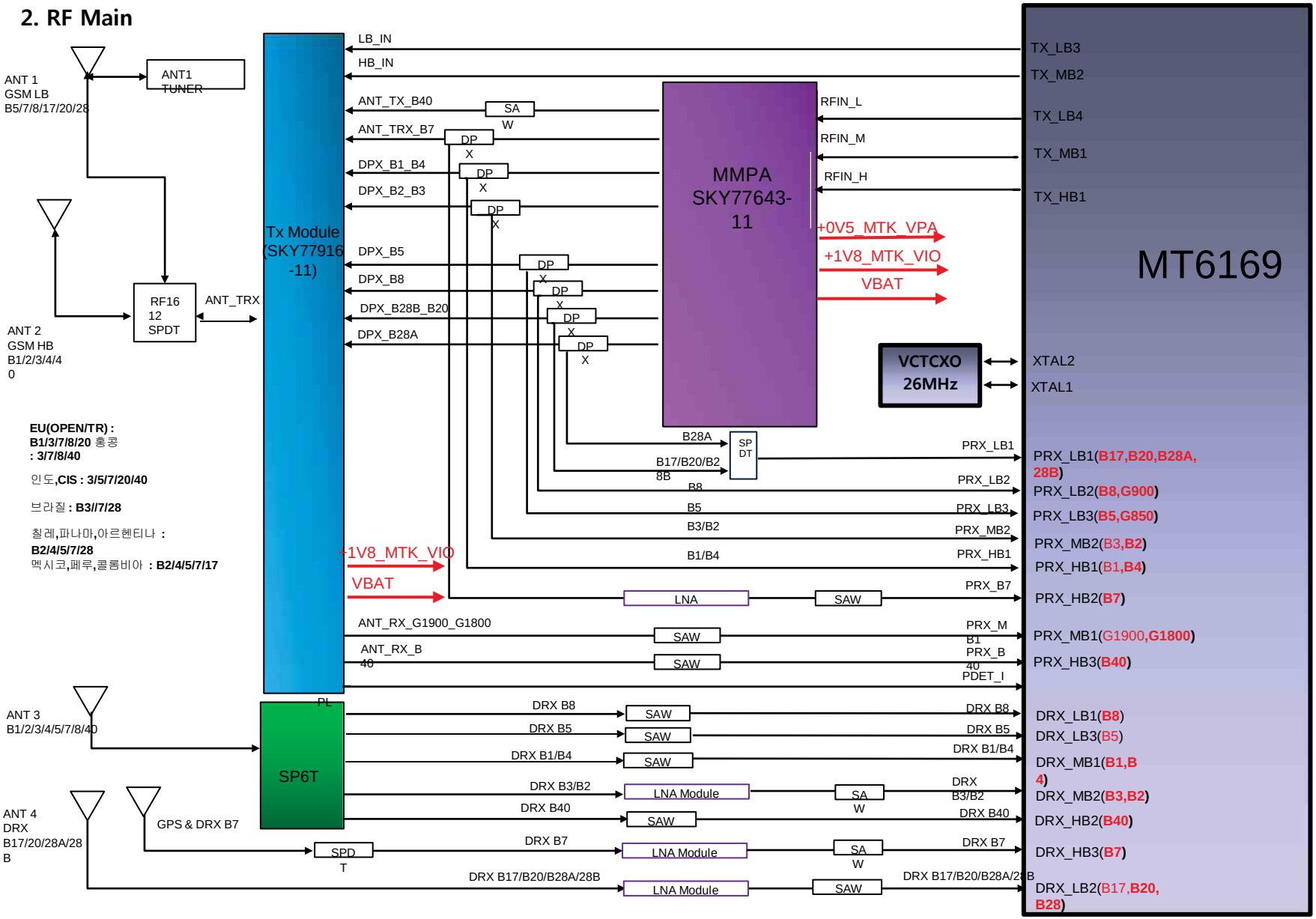




Copyright © 2015 LG Electronics. Inc. All right reserved. Only training and service purposes

## 3. Power block diagram

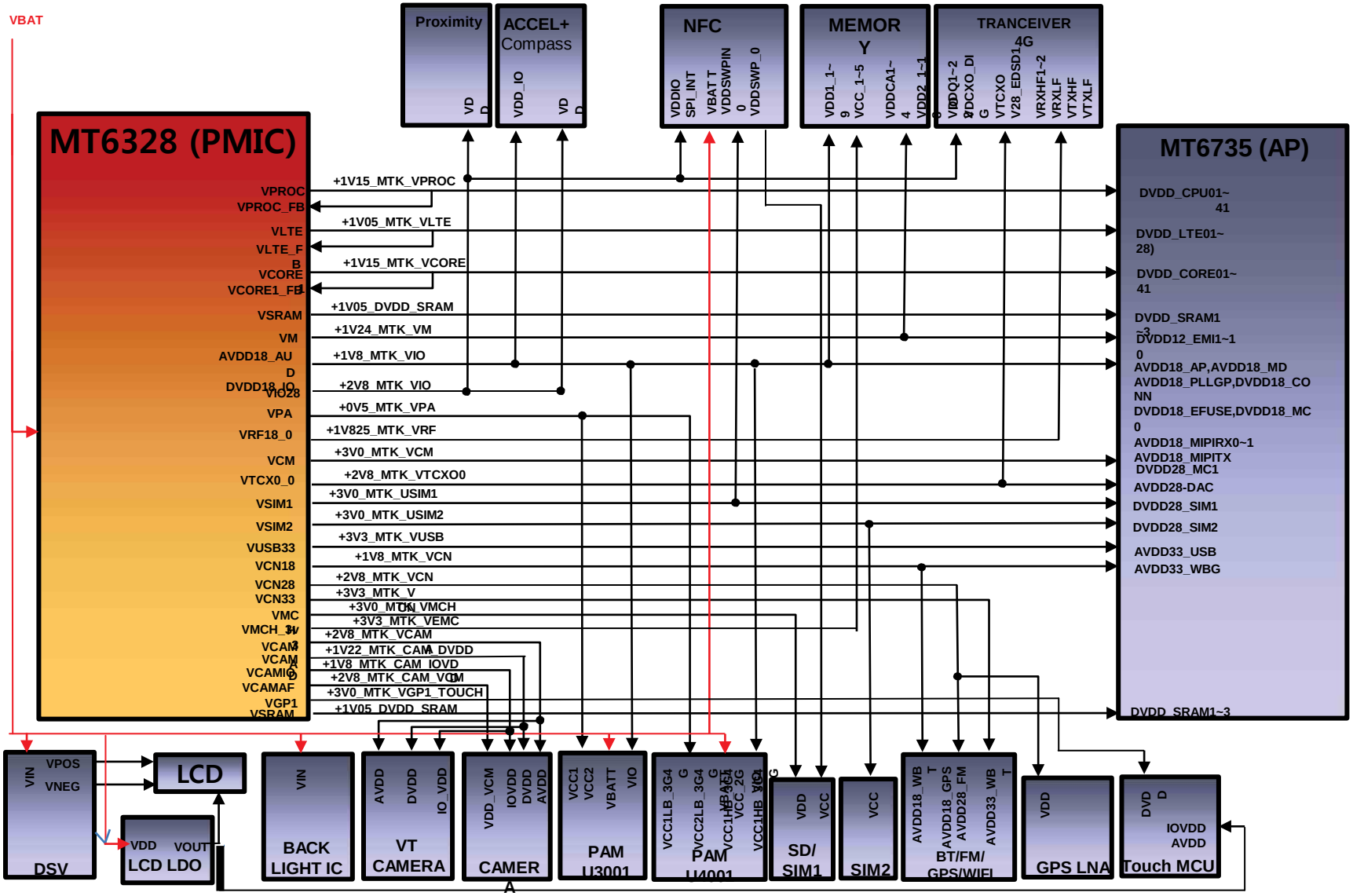




Copyright © 2015 LG Electronics. Inc. All right reserved. Only training and service purposes

## 4. Memory / USIM / Micro SD

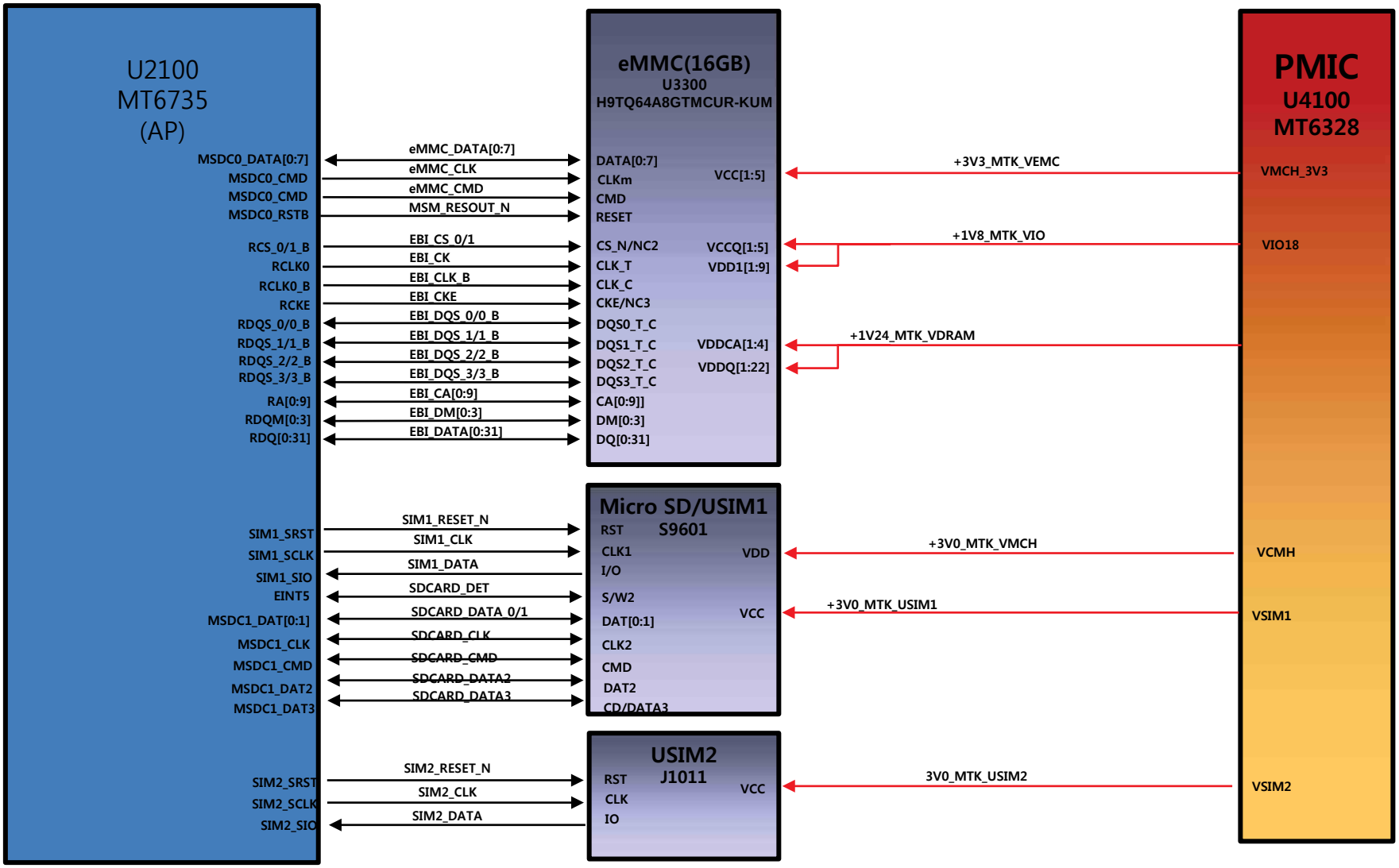




Copyright © 2015 LG Electronics. Inc. All right reserved. Only training and service purposes

## 5. LCD(INCELL TOUCH)

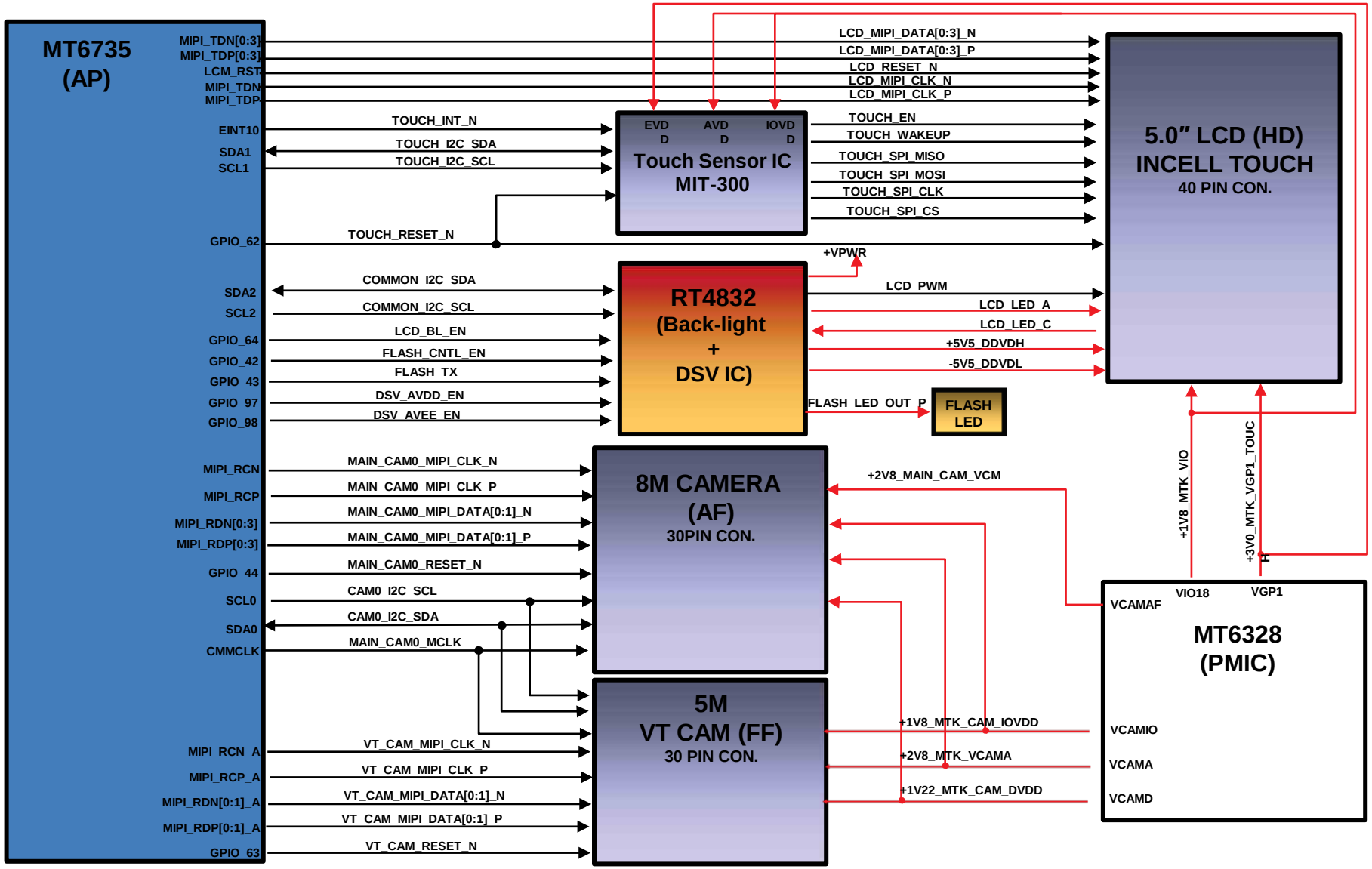




Copyright © 2015 LG Electronics. Inc. All right reserved. Only training and service purposes

## 7. AUDIO

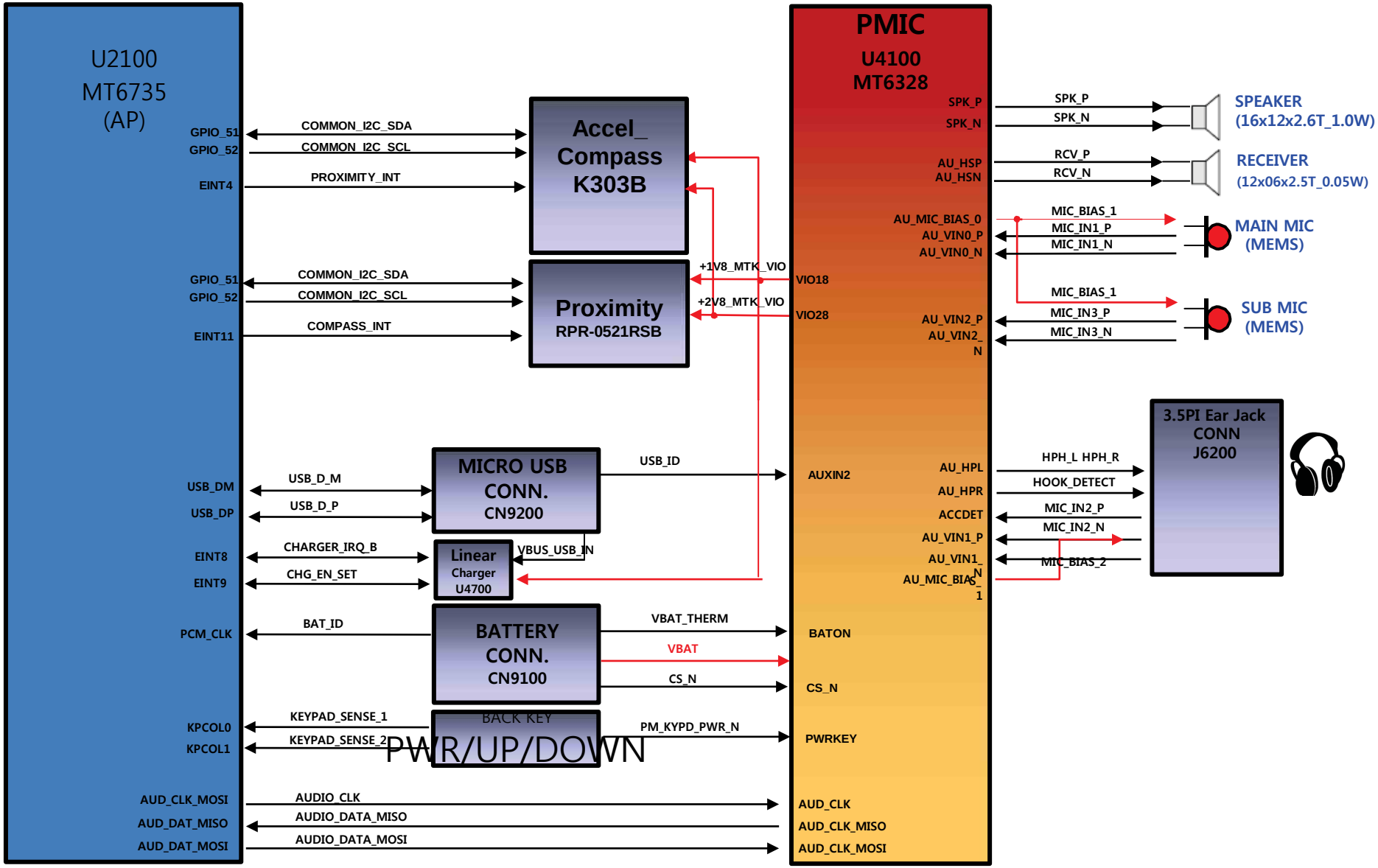




Copyright © 2015 LG Electronics. Inc. All right reserved. Only training and service purposes

## 8. Connectivity (BT / WIFI / GPS / FM RADIO)

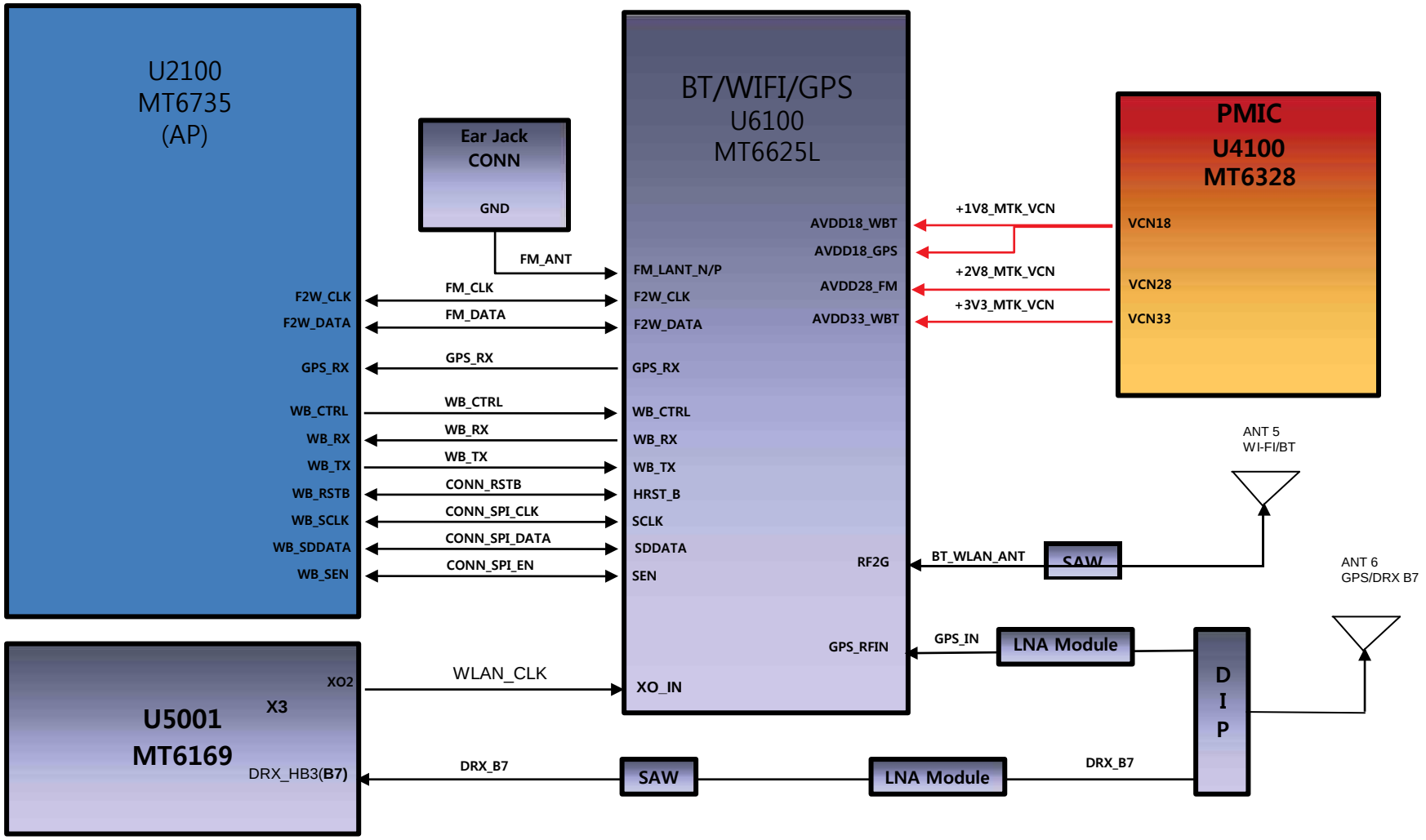




Copyright © 2015 LG Electronics. Inc. All right reserved. Only training and service purposes

# CIRCUIT DIAGRAM



Copyright ⓒ 2015 LG Electronics. Inc. All right reserved. Only training and service purposes

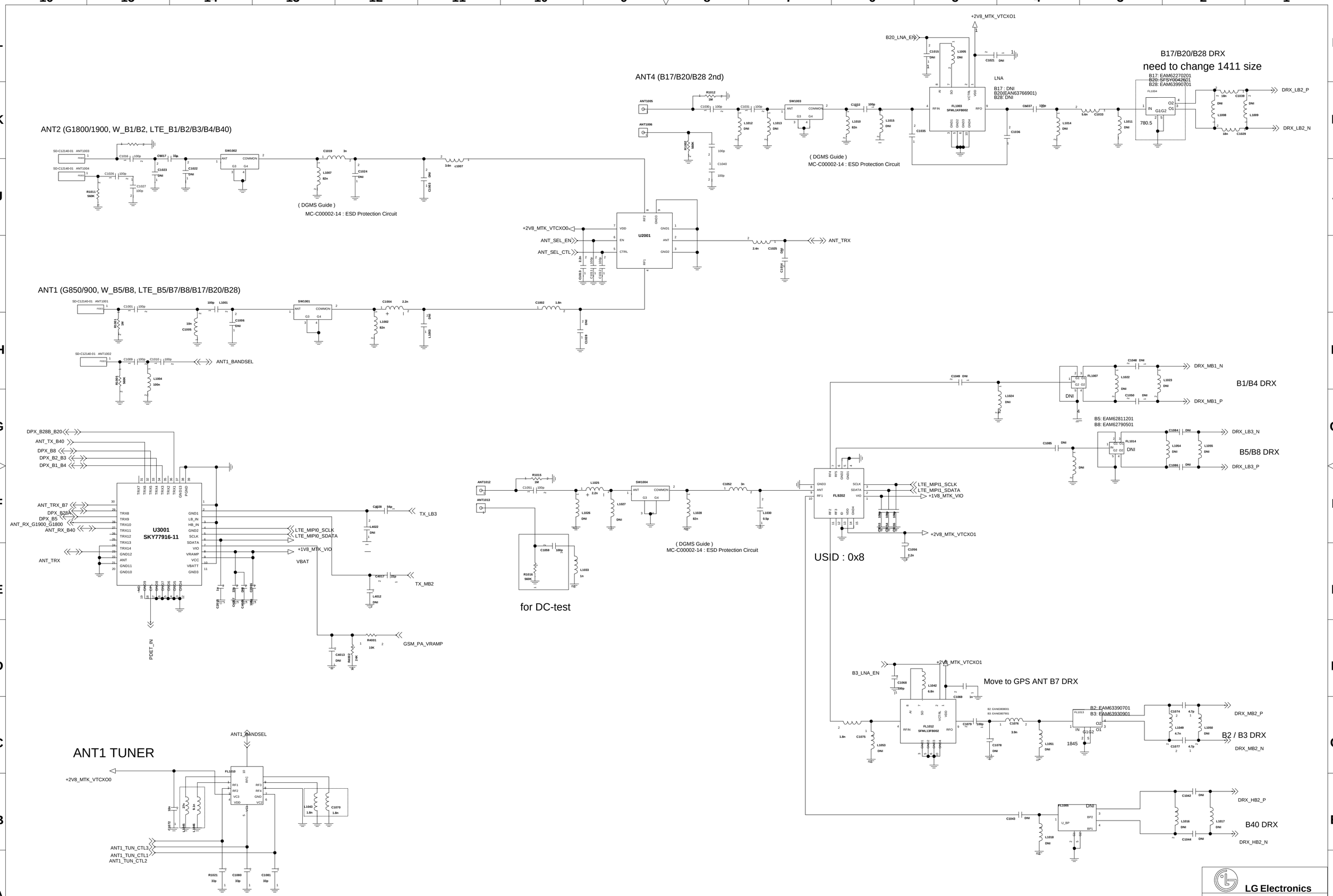
ANT2 (G1800/1900, W_B1/B2, LTE_B1/B2/B3/B4/B40)
ANT1 (G850/900, W_B5/B8, LTE_B5/B7/B8/B17/B20/B28)
ANT4 (B17/B20/B28 2nd)
B17/B20/B28 DRX
need to change 1411 size
B17: EAM62270201
B20: SFSY0042601
B28: EAM63990701
LNA
B17 : DNI
B20(EAN63766901)
B28: DNI
( DGMS Guide )
MC-C00002-14 : ESD Protection Circuit
U2001
U3001
SKY77916-11
B1/B4 DRX
B5: EAM62811201
B8: EAM62790501
B5/B8 DRX
USID : 0x8
for DC-test
Move to GPS ANT B7 DRX
B2: EAM63390701
B3: EAM63930901
B2 / B3 DRX
B40 DRX
ANT1 TUNER
LGE Internal Use Only
LG Electronics
Schematic1
User Name
PDM NUMBER
Rev

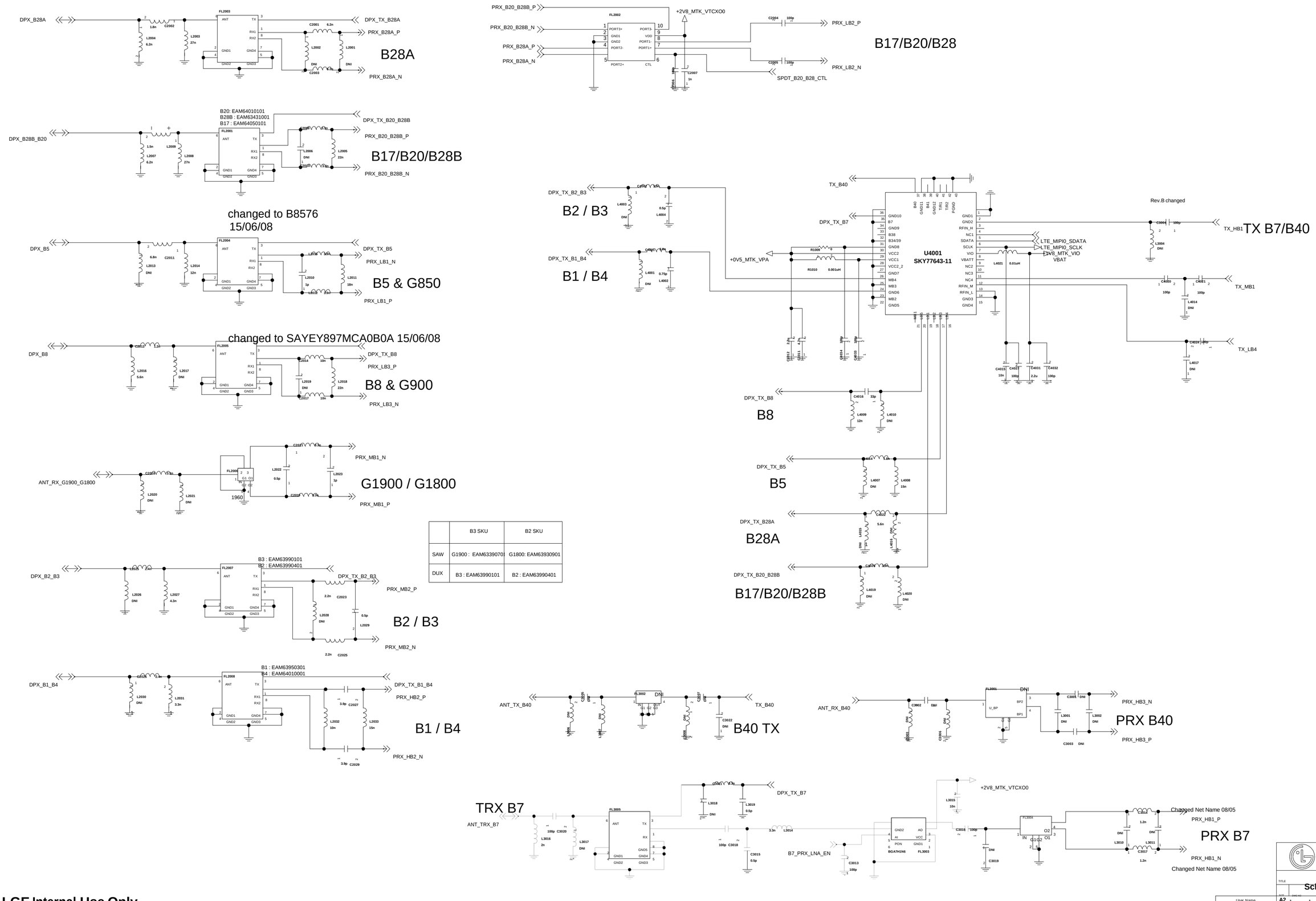
B28A
DPX_B28A
PRX_B28A_P
PRX_B28A_N
B17/B20/B28
PRX_B20_B28B_P
PRX_B20_B28B_N
PRX_B28A_P
PRX_B28A_N
+2V8_MTK_VTCXO0
PRX_LB2_P
PRX_LB2_N
SPDT_B20_B28_CTL
B17/B20/B28B
B20: EAM64010101
B28B : EAM63431001
B17 : EAM64050101
DPX_B28B_B20
DPX_TX_B20_B28B
PRX_B20_B28B_P
PRX_B20_B28B_N
changed to B8576
15/06/08
B5 & G850
DPX_B5
DPX_TX_B5
PRX_LB1_N
PRX_LB1_P
changed to SAYEY897MCA0B0A 15/06/08
B8 & G900
DPX_B8
DPX_TX_B8
PRX_LB3_P
PRX_LB3_N
G1900 / G1800
ANT_RX_G1900_G1800
PRX_MB1_N
PRX_MB1_P
B2 / B3
DPX_B2_B3
DPX_TX_B2_B3
PRX_MB2_P
PRX_MB2_N
B3 : EAM63990101
B2 : EAM63990401
B1 / B4
DPX_B1_B4
DPX_TX_B1_B4
PRX_HB2_P
PRX_HB2_N
B1 : EAM63950301
B4 : EAM64010001
B2 / B3
DPX_TX_B2_B3
B1 / B4
DPX_TX_B1_B4
B8
DPX_TX_B8
B5
DPX_TX_B5
B28A
DPX_TX_B28A
B17/B20/B28B
DPX_TX_B20_B28B
TX B7/B40
TX_B40
DPX_TX_B7
+0V5_MTK_VPA
U4001
SKY77643-11
LTE_MIPI0_SDATA
LTE_MIPI0_SCLK
1V8_MTK_VIO
VBAT
Rev.B changed
TX_HB1
TX_MB1
TX_LB4
B40 TX
ANT_TX_B40
TX_B40
PRX B40
ANT_RX_B40
PRX_HB3_N
PRX_HB3_P
TRX B7
ANT_TRX_B7
DPX_TX_B7
+2V8_MTK_VTCXO0
B7_PRX_LNA_EN
PRX B7
PRX_HB1_P
PRX_HB1_N
Changed Net Name 08/05
Changed Net Name 08/05
| | B3 SKU | B2 SKU |
|---|---|---|
| SAW | G1900 : EAM63390701 | G1800: EAM63930901 |
| DUX | B3 : EAM63390101 | B2 : EAM63990401 |
LG Electronics
Schematic1
A2
PDM NUMBER
Rev
User Name
LGE Internal Use Only
82

# <1-9-5-1_RFIC_MT6169>

Rev_0.4

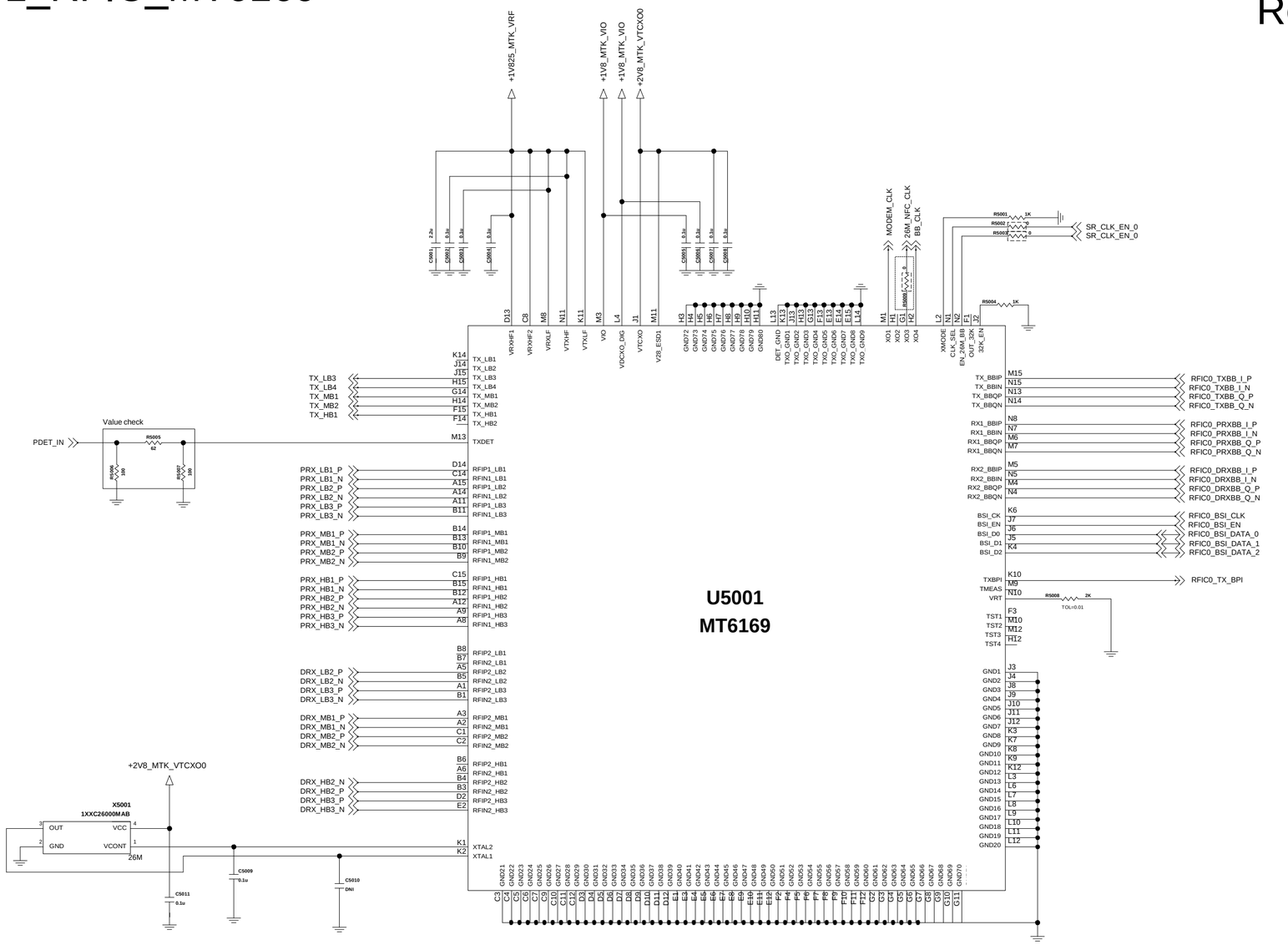


LG Electronics

MODEL NAME

| SIZE | DWG NO | REV |
|---|---|---|
| A2 | PDM NUMBER | Rev |

| DRAWN BY | SHEET | of | Date |
|---|---|---|---|
| User Name | 1_WTR1605L | 20 | Drawing Date |

# < 2-x-x-x-1_MT6735_DATA >

REV_0.1

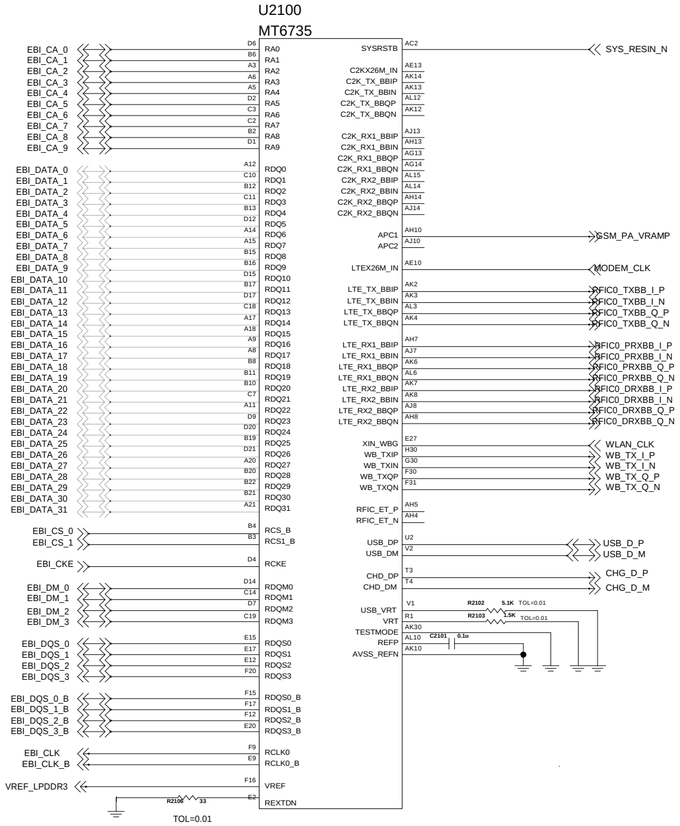


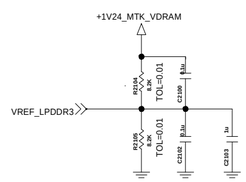


# PCB REVISION_GPIO

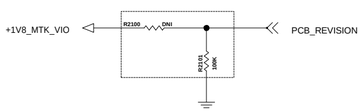


| Revision | R2100 | R2101 | Level |
|---|---|---|---|
| A | 100K | 20K | 0.300 |
| B | 100K | 39K | 0.505 |
| C | 100K | 51K | 0.680 |
| D | 100K | 100K | 0.900 |
| 1.0 | DNI | 100K | 0.000 |
| 1.1 | 100K | DNI | 1.800 |

# < 2-3-6-1-2_MT6735_GPIO >

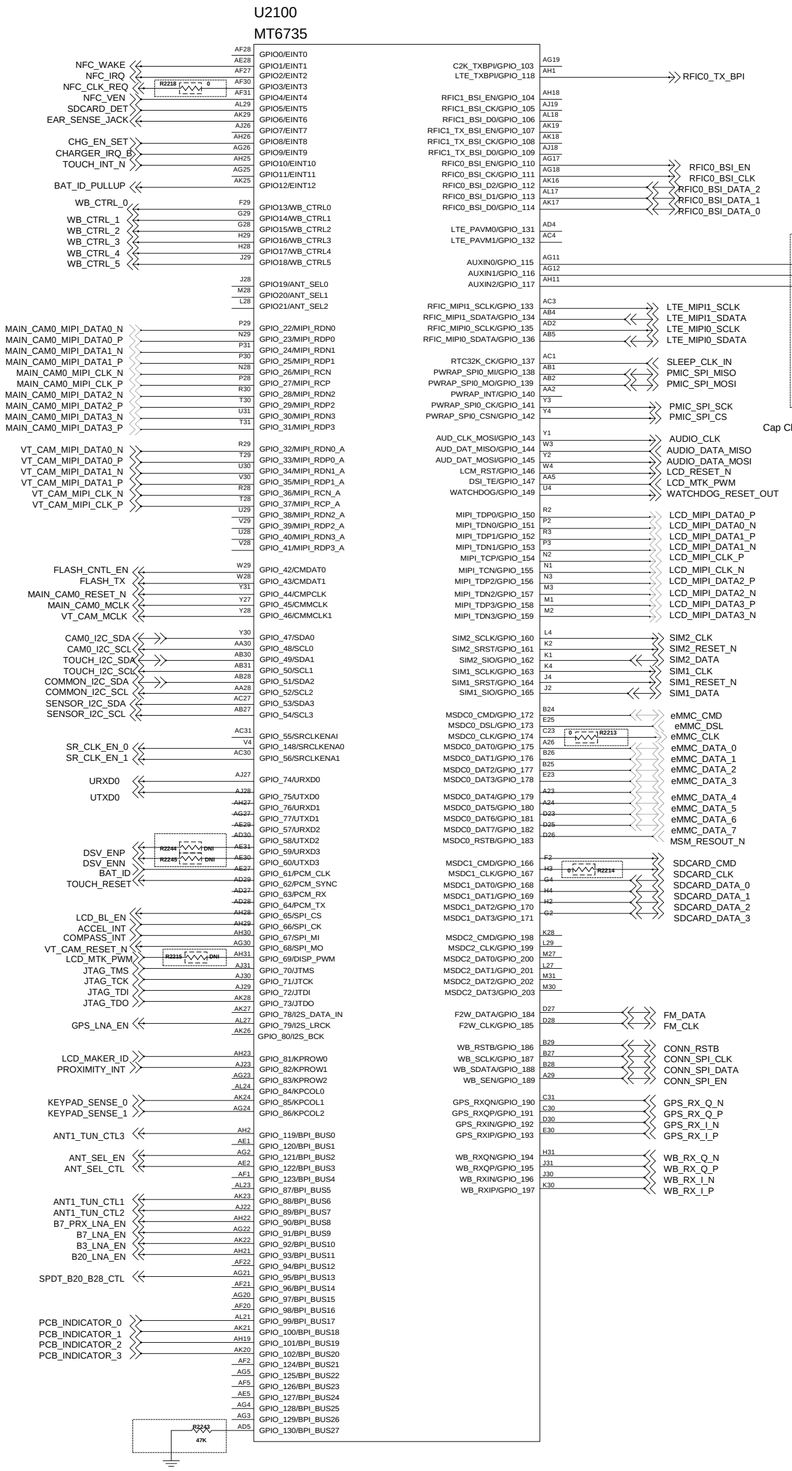


# I2C Pull-Up

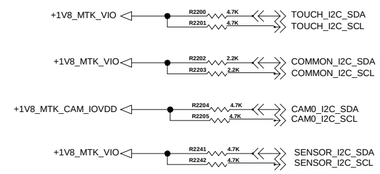


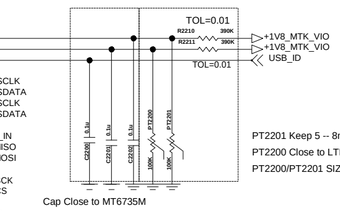


Cap Close to MT6735M

PT2201 Keep 5 -- 8mm to MT6735P

PT2200 Close to LTE PA

PT2200/PT2201 SIZE CHANGE to 0603, 151019

# PCB Indicator

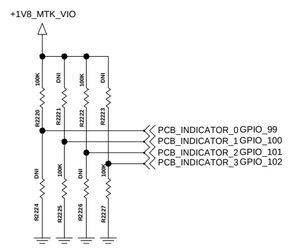


# Model Indicator

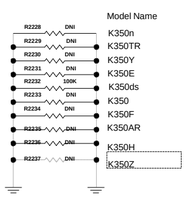


| Model | Band | NFC | SIM | GPIO_SUM | GPIO_99 | GPIO_100 | GPIO_101 | GPIO_102 |
|---|---|---|---|---|---|---|---|---|
| K350n | 1/3/7/8/20 | O | SINGLE | 9 | 1 | 0 | 0 | 1 |
| K350TR | 1/3/7/8/20 | X | SINGLE | 1 | 0 | 0 | 0 | 1 |
| K350Y | 3/7/8/40(TDD) | O | SINGLE | 2 | 0 | 0 | 1 | 0 |
| K350E | 3/7/20 | X | DUAL | 3 | 0 | 0 | 1 | 1 |
| K350ds | 3/7/28 | X | DUAL | 10 | 1 | 0 | 1 | 0 |
| K350 | 3/7/28 | X | SINGLE | 5 | 0 | 1 | 0 | 1 |
| K350F | 2/4/5/7/28 | X | SINGLE | 6 | 0 | 1 | 1 | 0 |
| K350AR | 2/4/5/7/28 | X | SINGLE | 7 | 0 | 1 | 1 | 1 |
| K350H | 2/4/5/7/17 | X | SINGLE | 8 | 1 | 0 | 0 | 0 |
| K350Z | 3/7/20 | X | DUAL | 11 | 1 | 0 | 1 | 1 |
| K350ds(A) | 3/7/28 | X | DUAL | 4 | 0 | 1 | 0 | 0 |
| K350n(A) | 1/3/7/8/20 | O | SINGLE | 0 | 0 | 0 | 0 | 0 |

LGE Internal Use Only

LG Electronics

TITLE: Schematic1

SIZE: A2 | DWG NO: PDM NUMBER | REV: Rev

DRAWN BY: User Name | SHEET 1 of 1 | Date: Drawing Date

< 2-x-x-x-3_MT6735_POWER > REV_0.1

< 2-x-x-x-4_MT6735_GND_NC > Rev_0.1

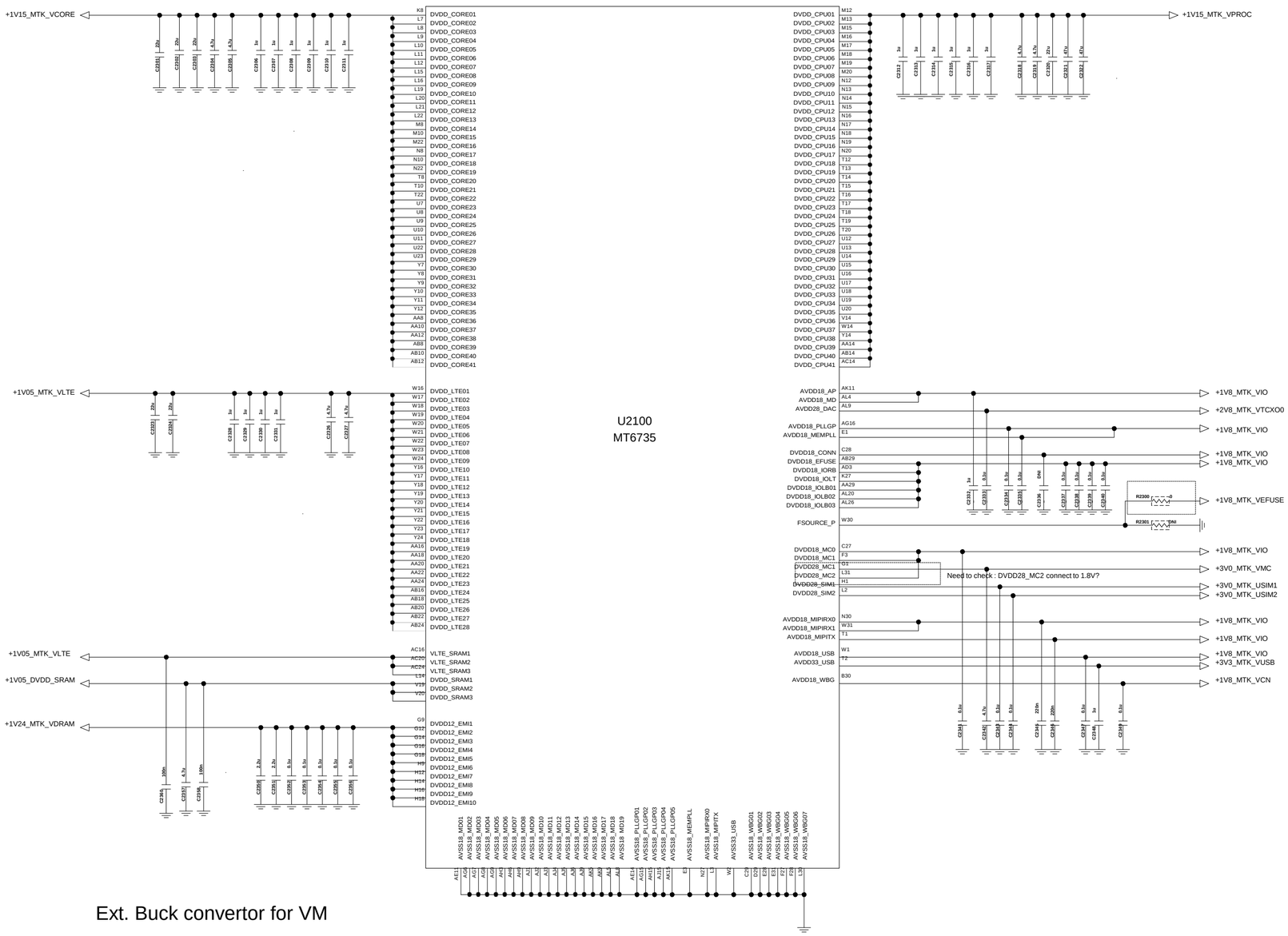


U2100
MT6735

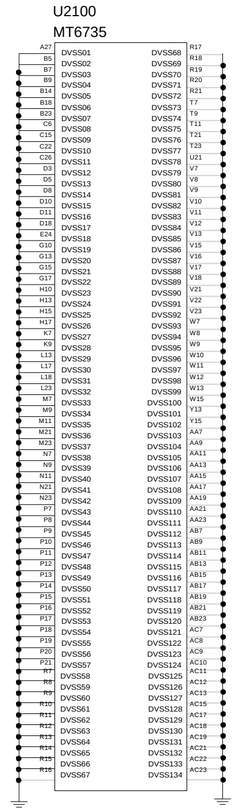

U2100
MT6735

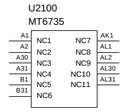

Ext. Buck convertor for VM

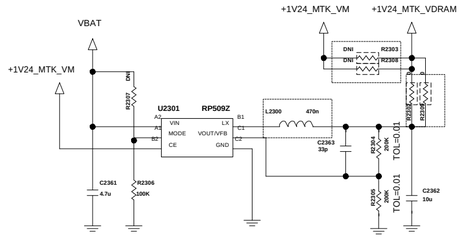


Output voltage changed : 1.15V - 141121

- Vout = Vfb x (1+R1/R2)
- C2363 x R2304 = 3x10^6 - 6x10^6

LGE Internal Use Only

LG Electronics

Schematic1

| SIZE | DWG NO | REV |
|---|---|---|
| A2 | PDM NUMBER | Rev |

DRAWN BY: User Name | SHEET 3 of 3 | Date: Drawing Date

# < 3-3-3-3-1_MCP_eMMC_5_0_16G_DDR3_8G_HYNIX > Rev_0.3

| Model | U3300 |
|---|---|
| K350n, K350TR, K350Y | EAN64188901 ( 1.5G/8G ) |
| Other model | EAN63646901 ( 1G/16G ) |

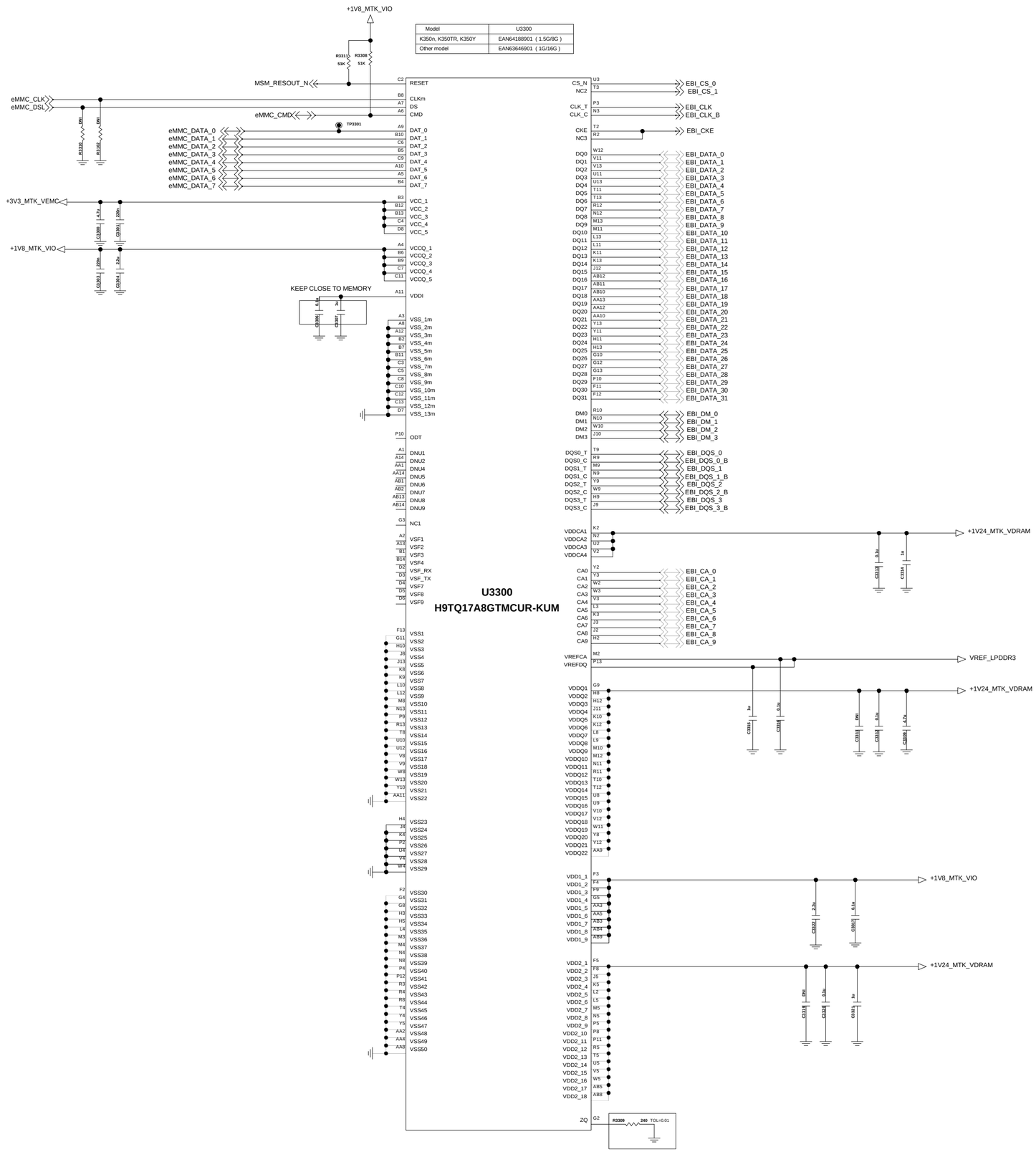


LG Electronics

Schematic1

A2 | PDM NUMBER | Rev

User Name | 1 | 29 | Drawing Date

LGE Internal Use Only

# <4-1-15-1_PMIC_MT6328_DATA> Rev_0.3

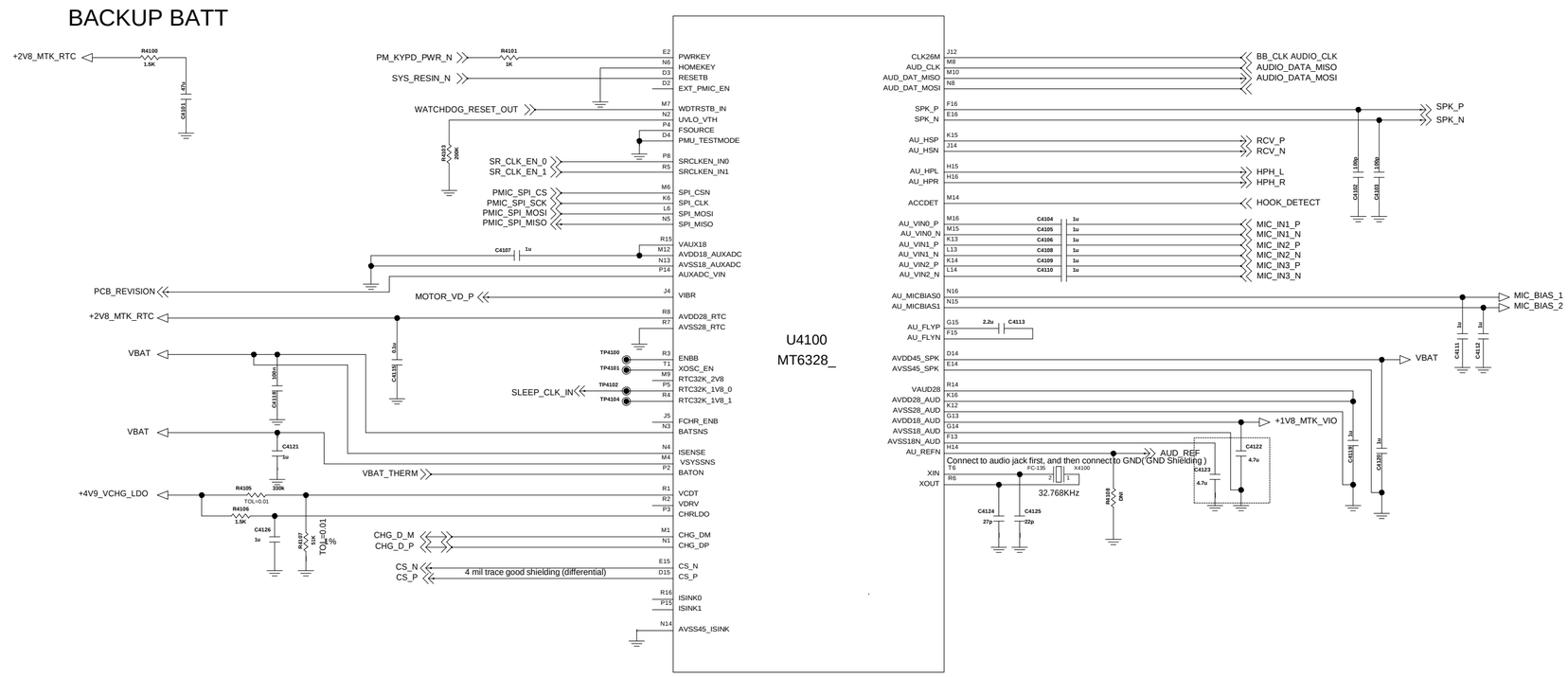


LGE Internal Use Only

LG Electronics

| | |
|---|---|
| TITLE | Schematic1 |
| SIZE | A2 |
| DWG NO | PDM NUMBER |
| REV | Rev |
| DRAWN BY | User Name |
| SHEET | 28 of 27 |
| Date | Drawing Date |

# <4-1-15-2_PMIC_MT6328_POWER> Rev_0.3

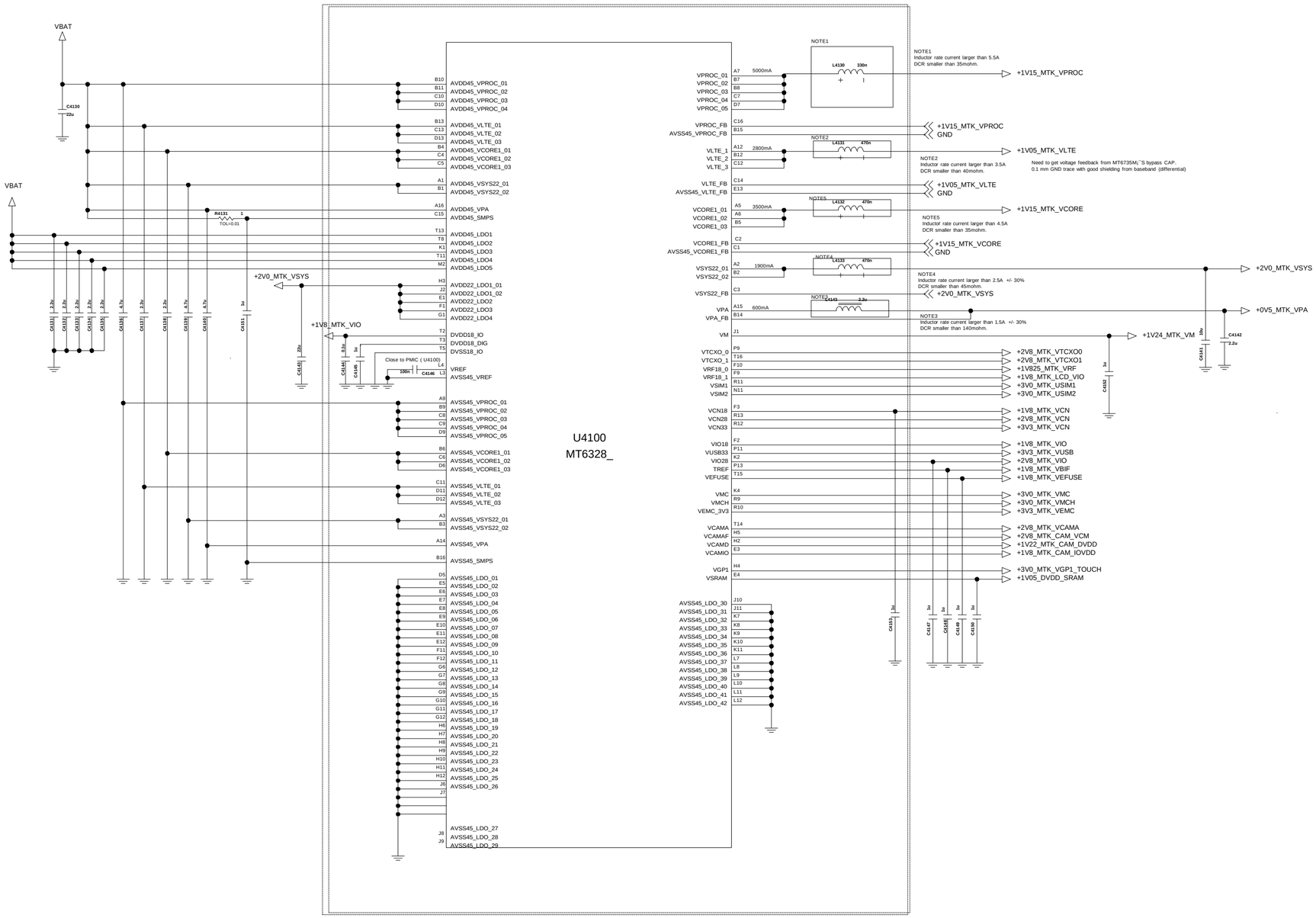


| Name | Output Current | Input Cap(uF) | Output Decoupling |
|---|---|---|---|
| VPROC | 5000 | 4.7 | 0.33uH +47UF*2 +22uF |
| VCORE | 3500 | 2.2 | 0.47uH +47uF *2 |
| VLTE | 2800 | 2.2 | 0.47uH +22uF*2 |
| VSYS | 1900 | 2.2 | 0.47uH +22uF +10uF |
| VPROC | 600 | 4.7 | 2.2uH +2.2uF +2.2uF |

| Name | Voltage(V) | Setting Voltage(V) | I Max (mA) | Layout Length/width( mil ) |
|---|---|---|---|---|
| VTCXO_0 | 2.8 | 2.8 | 40 | L/W =2800/6 |
| VTCXO_1 | 2.8 | 2.8 | 40 | L/W =2800/6 |
| VCN33 | 3.0/3.1/3.2/3.3/3.4/3.5/3.6 | 3.3 | 350 | L/W =2800/12 |
| VCN28 | 2.8 | 2.8 | 40 | L/W =2800/6 |
| VCAMA | 1.5/1.8/2.8 | 2.8 | 200 | L/W =2800/10 |
| VAUX18 | 1.8 | 1.8 | 40 | L/W =2800/6 |
| VAUD28 | 2.8 | 2.8 | 40 | L/W =2800/6 |
| VRF18_0 | 1.825 | 1.825 | 350 | L/W =2800/10 |
| VRF18_1 | 1.2/1.3/1.5/1.825 | 1.825 | 300 | L/W =2800/10 |
| VMCH | 3.0/3.3 | 3.3 | 800 | L/W =2800/20 |
| VIO28 | 2.8 | 2.8 | 200 | L/W =2800/10 |
| VMC | 1.8/3.0/3.3 | 3.0 | 200 | L/W =2800/10 |
| VCAM_AF | 1.2/1.3/1.5/1.8/2.0/2.8/3.0/3.3 | 2.8 | 200 | L/W =2800/10 |
| VGP1 | 1.2/1.3/1.5/1.8/2.0/2.8/3.0/3.3 | 3.0 | 200 | L/W =2800/10 |
| VIBR | 1.2/1.3/1.5/1.8/2.0/2.8/3.0/3.3 | 3.3 | 100 | L/W =2800/8 |
| VUSB33 | 3.3 | 3.3 | 20 | L/W =2800/6 |
| VSIM1 | 1.7/1.8/1.86/2.76/3.0/3.1 | 1.8 | 50 | L/W =2800/6 |
| VSIM2 | 1.7/1.8/1.86/2.76/3.0/3.1 | 1.8 | 50 | L/W =2800/6 |
| VEFUSE | 1.8/1.9/2.0/2.1/2.2 | 1.8 | 200 | L/W =2800/10 |
| VEMC33 | 3.0/3.3 | 3.0 | 400 | L/W =2800/12 |
| VM | 1.24/1.39/1.54 | 1.24 | 1000 | L/W =1500/25 |
| VCAM_IO | 1.2/1.3/1.5/1.8 | 1.8 | 200 | L/W =2800/10 |
| VCN18 | 1.8 | 1.8 | 150 | L/W =2800/10 |
| VSRAM | 0.6 -- 1.31 | 1.05 | 200 | L/W =1500/18 |
| VIO18 | 1.8 | 1.8 | 600 | L/W =2800/20 |
| VCAMD | 0.9/1.0/1.1/1.22/1.3/1.5 | 1.22 | 500 | L/W =2800/16 |
| DVDD18_DIG | 1.8 | 1.8 | 20 | L/W =800/4 |
| VRTC | 2.8 | 2.8 | 2 | L/W =800/4 |

LG Electronics

TITLE: Schematic1

SIZE: A2 | DWG NO: PDM NUMBER | REV: Rev

DRAWN BY: User Name | SHEET 29 OF 28 | Date: Drawing Date

**LGE Internal Use Only**

# <5-1-1-18_MT6625L_WiFi_BT_GPS_FM> Rev_0.3

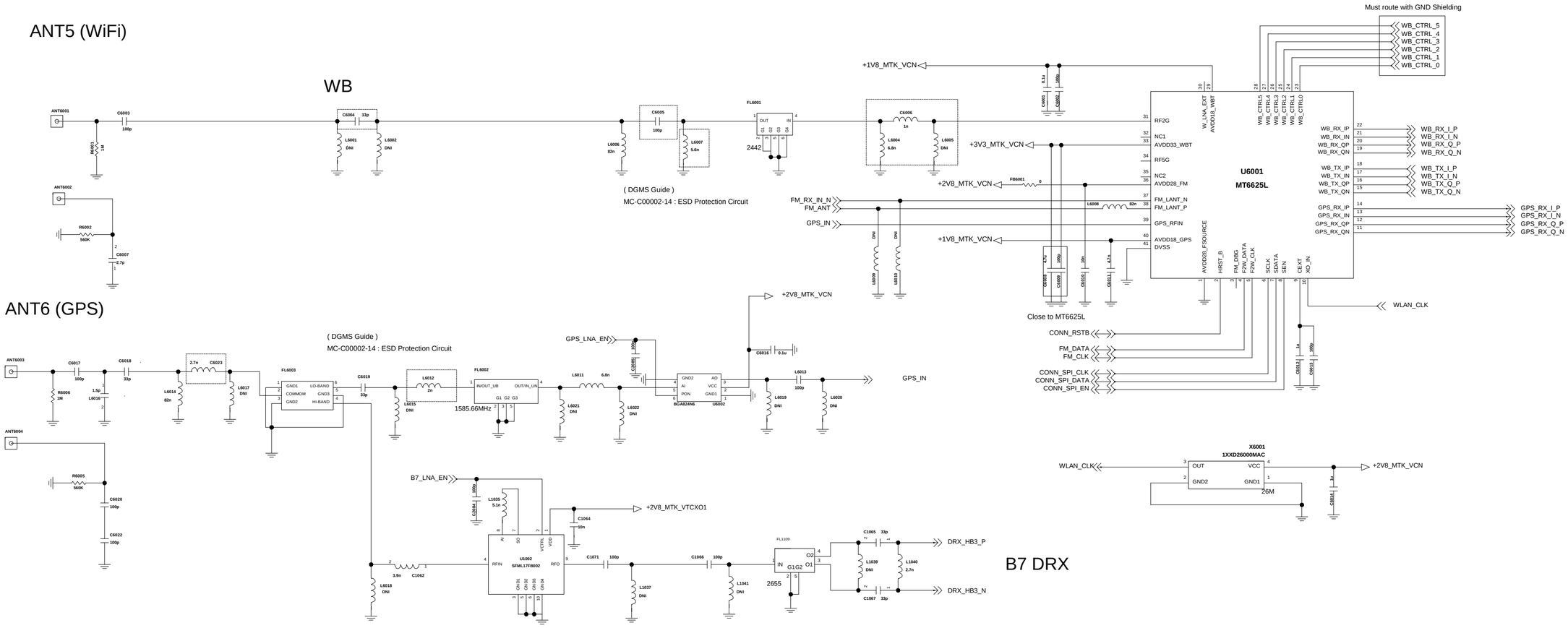


# <5-2-1-8_BCM20795F> Rev_1.0

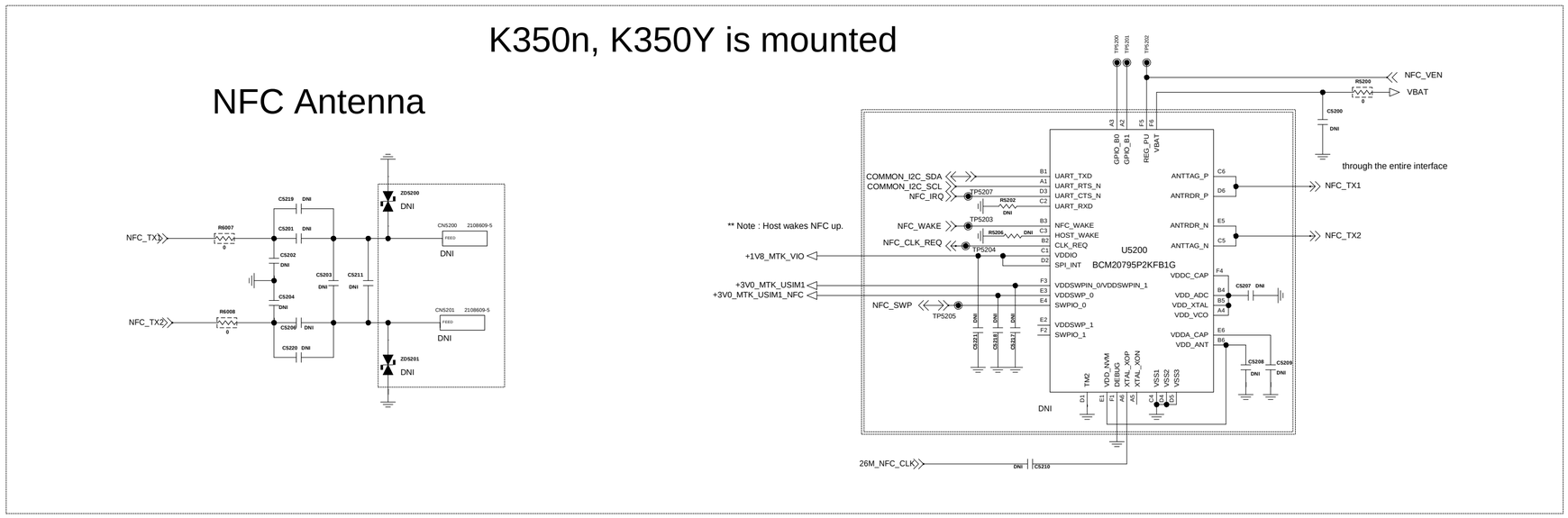


LGE Internal Use Only

LG Electronics

Schematic1

A2 | PDM NUMBER | Rev

Drawn By: User Name | Sheet 8 of 8 | Date: Drawing Date

# < 6-6-1_Earjack > Rev_0.9

## Circuit 2. Ear jack_3.5pi with MBHC

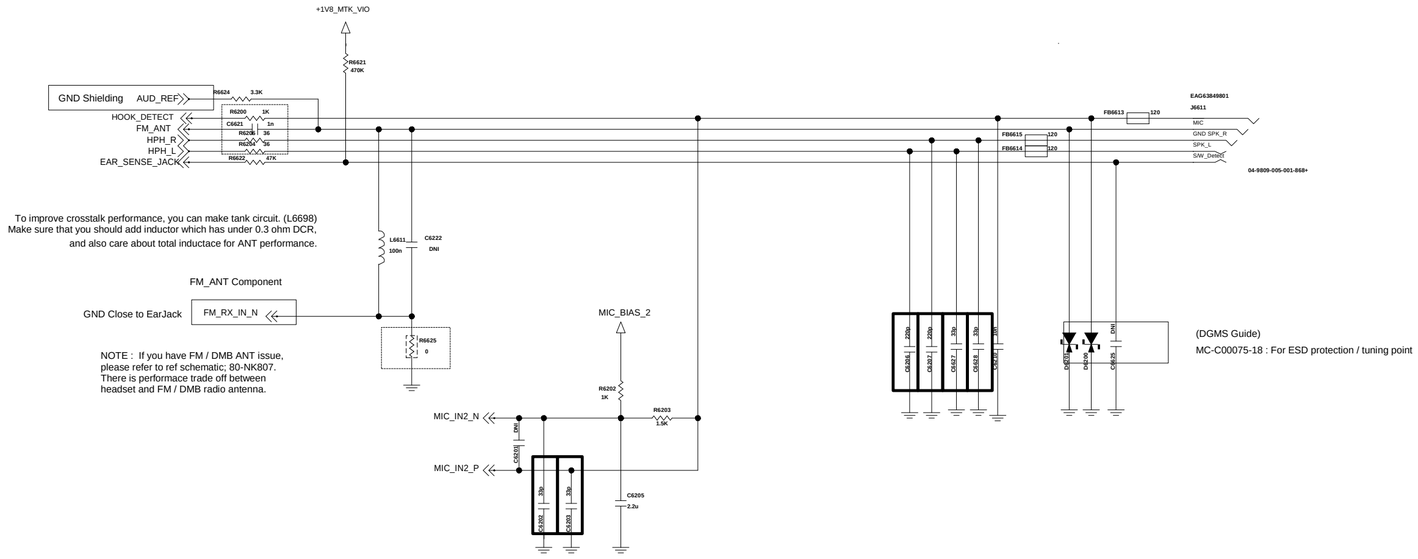


Note: Total capacitance on HPH_L/R and HS_MIC line SHOULD be under 1nF.

# <6-7-1_Speaker> Rev_1.2

## Speaker

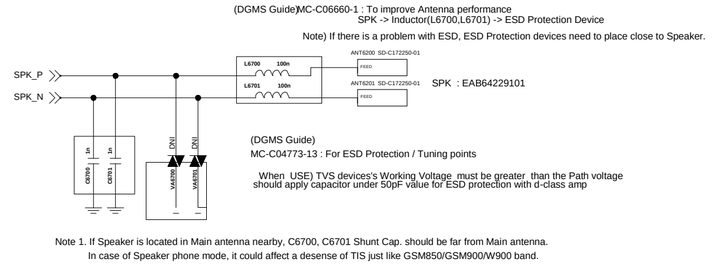


Note 1. If Speaker is located in Main antenna nearby, C6700, C6701 Shunt Cap. should be far from Main antenna.
In case of Speaker phone mode, it could affect a desense of TIS just like GSM850/GSM900/W900 band.

# < 6-9-1_MIC > Rev_1.0

## Circuit 1. Top Type MEMS MIC

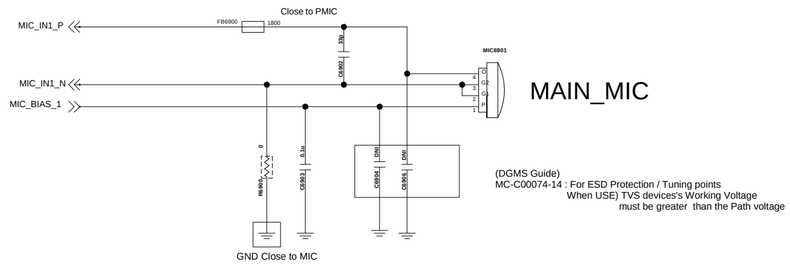


1. The value of the component can be changed after test.
2. Developer should change parameter setting by according to existence of shunt capacitor
   ex) WCD9310 // 80-N1622-91 Rev. E

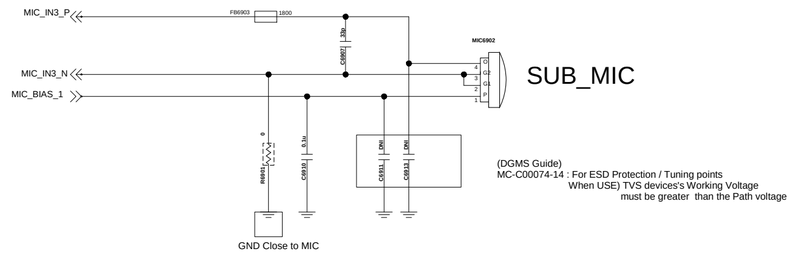


1. The value of the component can be changed after test.
2. Developer should change parameter setting by according to existence of shunt capacitor
   ex) WCD9310 // 80-N1622-91 Rev. E

# < 6-8-1_Receiver > Rev_1.1

## Circuit 1. Receiver without T-Coil

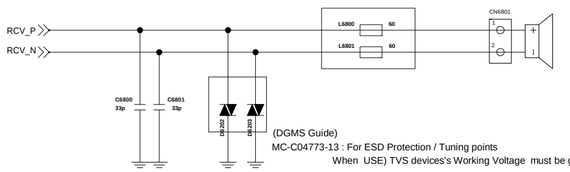


LG Electronics

TITLE: MSM8926_X5_GLOBAL

SIZE: A2 | DWG NO: PDM NUMBER | REV: Rev

DRAWN BY: User Name | SHEET: Sensor of 5 | Date: Drawing Date

**LGE Internal Use Only**

# < 7-1-5_LCD_HD > Rev_1.1

## LCD 2. 5.0 Inch incell

| LCD Information | |
|---|---|
| Maker | LGD |
| Driver IC | DB7400 |
| Connector | EAG64751201 |

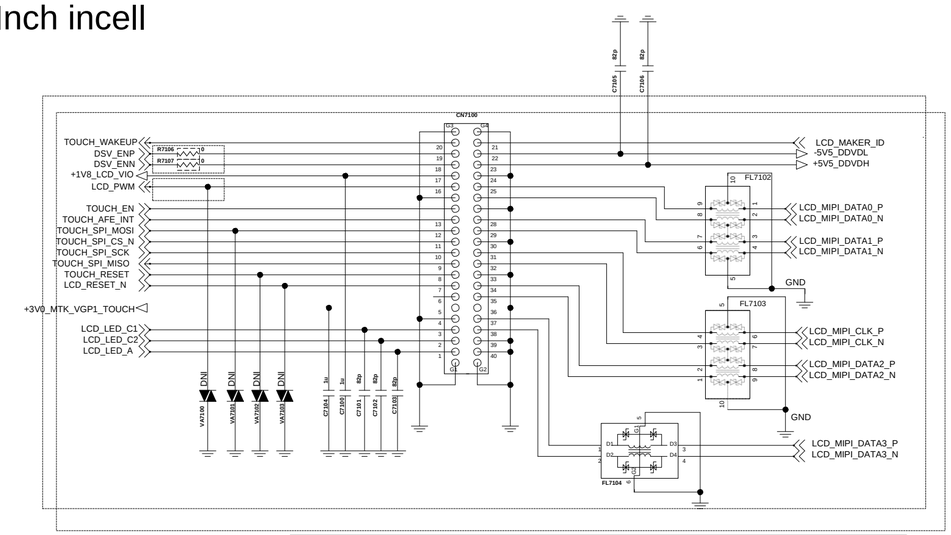


[ DGMS Guide ]
MC-C00057-16
1 - Components for ESD Protection should be located nearby at LCD Data, Control and Power line.
2- Basically, DNI_PAD for ESD Protection components should be used.
2- LCD RESET should be allocated with dedicated GPIO for the purpose of Reset function.

# <4-4-7_LCD_Backlight_Flash_DSV_IC_RT4832> Rev_0.1

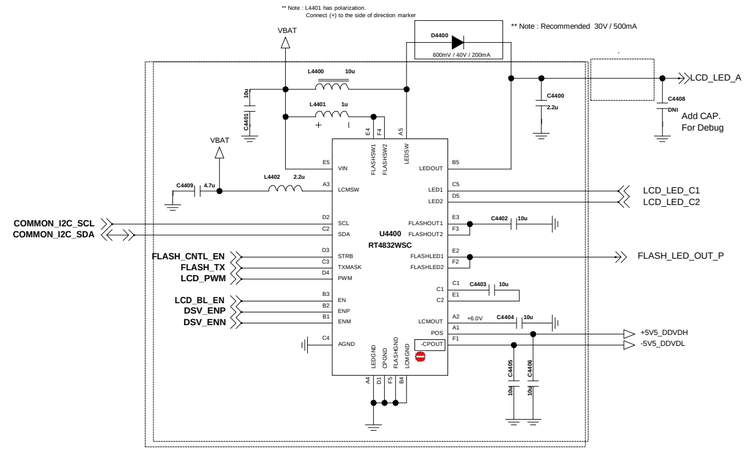


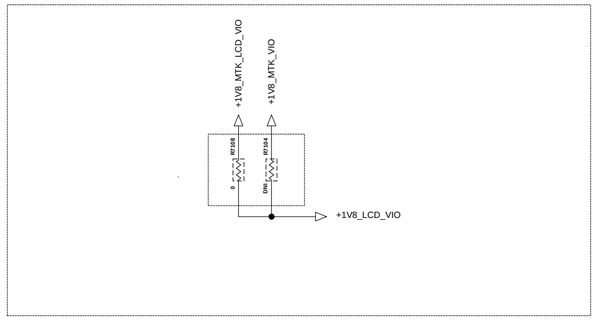


# < 7-3_Main_Camera > Rev_1.1

## Camera 5. 30pin 5M 8M AF

8M AF

-. EBP62702201 ( IM Tech )

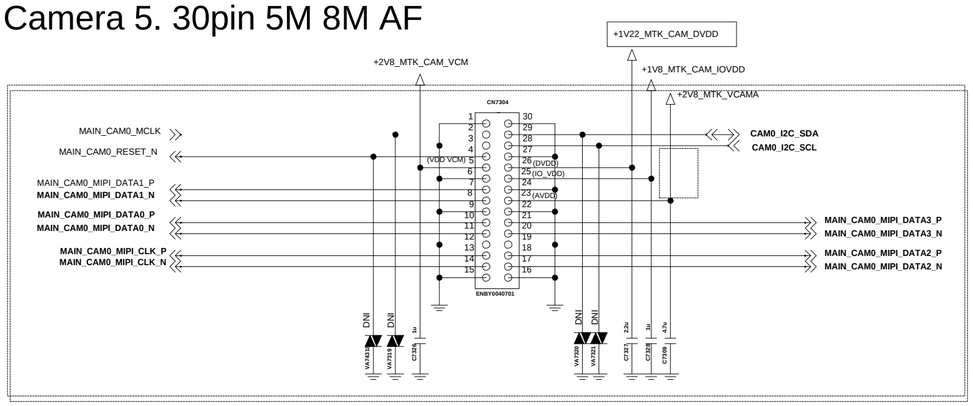


# TOUCH MCU
# MIT-300

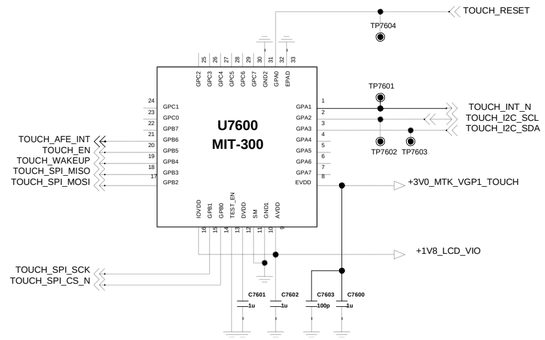


# < 7-4_VT_Camera> Rev_1.2

## Camera 5. 30pin 5M FF

5M FF

-. EBP62722501 ( BYD )

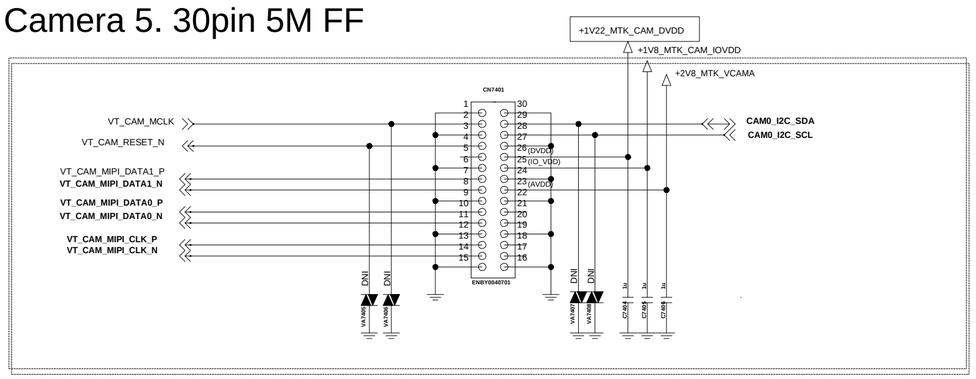


LGE Internal Use Only

| | |
|---|---|
| LG Electronics | |
| TITLE | MODEL NAME |
| SIZE A2 | PDM NUMBER |
| SHEET 1 OF 2 | Rev |
| DESIGN BY User Name | Date Drawing Date |

## <8-1-2-2_Accel_Compass_K303B> Rev_0.3

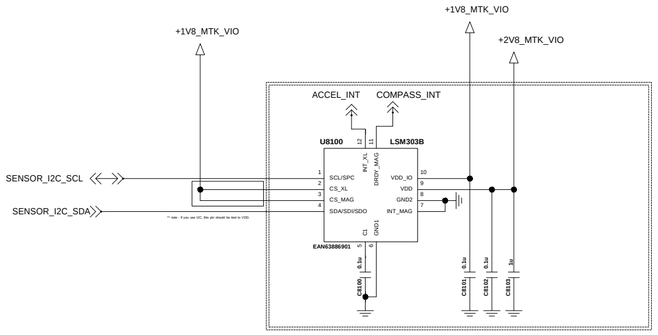


## < 8-4-3-4_Proximity_RPR-0521RSB235 > Rev_0.1

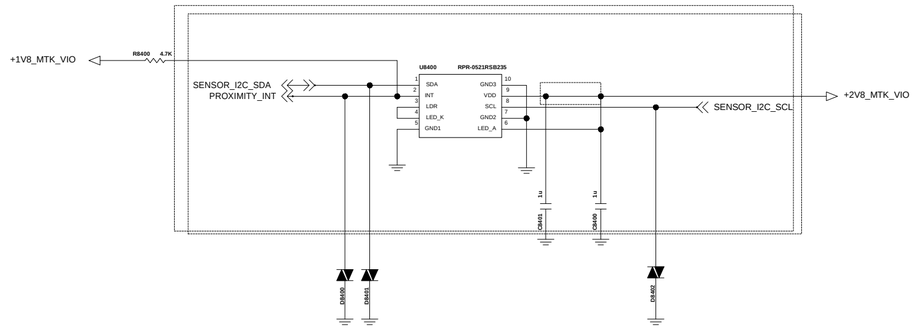


## < 9-3-1_JTAG > Rev_0.4

Rev1.0 DNI

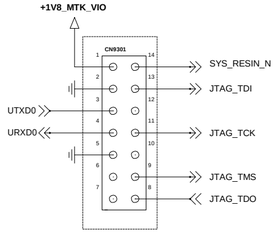


## < 9-9-1-1_Motor > Rev_0.3

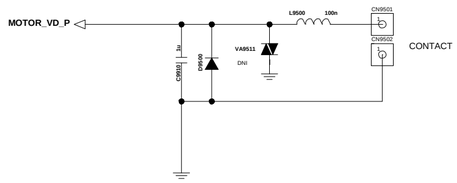


## [ C-Clip ]

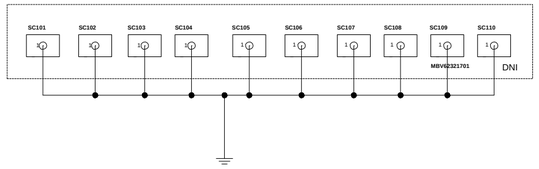


LGE Internal Use Only

| | |
|---|---|
| LG Electronics | |
| TITLE | MSM8926_X5_GLOBAL |
| SIZE A2 | DWG NO PDM NUMBER |
| | REV Rev |
| DRAWN BY User Name | SHEET Sensor OF 5 |
| | Date Drawing Date |

# <9-1_Battery_Connector_4Pin> Rev_1.4

Circuit 5. Batt Conn.(For MTK Platform)

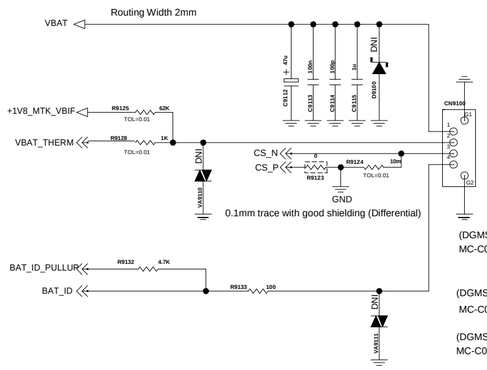


4.35V Battery PIN Map one more check

| | Pin map | | | |
|---|---|---|---|---|
| Normal Voltage ( 4.2V ) | V+ | TH | V- | V- |
| High Voltage ( 4.35V ) | V+ | TH | V- | ID |
| High Voltage 2 ( 4.4V ) | V+ | ID | TH | V- |

(DGMS Guide)
MC-C00073-15 : Apply to large capacity around the bat connector
1. Over 47uF around the bat connector
2. Over 100uF totally on Vbat line
Use the TVS diode of VR=5V, when TVS diode have to use for ESD

(DGMS Guide)
MC-C06162-1 : 1. Do not connect negative of tantal Cap. to positive voltage if use
2. We recommend Ceramic Cap.

(DGMS Guide)
MC-C02048-18 : 4. Polymer type tantal cap. is Spec =< Voltage rating X 0.8

# <9-2-1_USB_IO> Rev_1.2

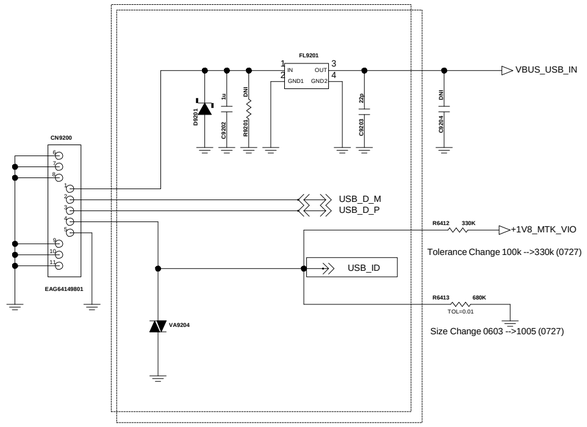


(DGMS Guide)

# <4-7-1-1_Linear Charger_RT9536> Rev_1.0

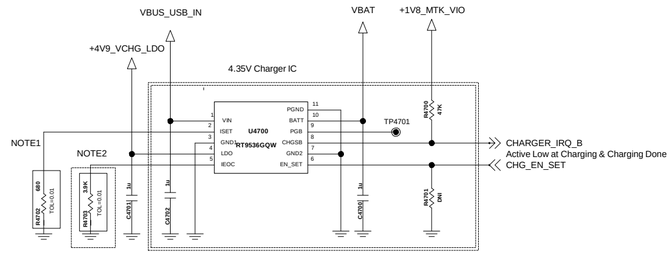


NOTE1
646mA (Need to change 1%)

| ISET Setting | IEOC Setting |
|---|---|
| 620 ohm : 850mA<br>680 ohm : 780mA<br>780 ohm : 680mA<br>820 ohm : 646mA | 2K ohm 10% : 78mA<br>3K ohm 15% : 117mA |

# < 9-6_u_SDCARD_Socket > Rev_1.3

Circuit 1. u-SDCARD SIM Combo for QMC /w Low Detection

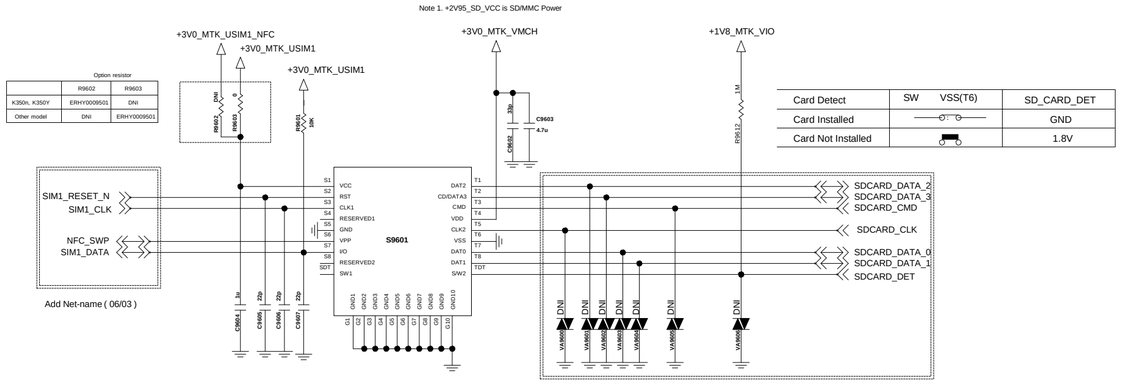


| | | | |
|---|---|---|---|
| Card Detect | SW | VSS(T6) | SD_CARD_DET |
| Card Installed | | | GND |
| Card Not Installed | | | 1.8V |

(DGMS Guide)
MC-C04581-13 : Below items should be satisfied
1. SIM_DATA pull-up resistor
2. Use under 33pF (Cap_Varistor) on each signal line
3. When routing, SIM_DATA, SIM_CLK should be seperated
4. CAP,Varistor should Place close to connector

(DGMS Guide)
MC-C04582-14 : Below items should be satisfied
1. SD_DETECT Pull-up or Pull-down

3. Use under total 10pF Capacitance on each line ; Data [0:3], CMD - Cap. TVS diode, varistor
( on other line, We recommend 10pF capacitance and use under 30pF capacitance )
4. CAP,Varistor should Place close to connector

(DGMS Guide)
MC-C05446-7 : Below items should be satisfied
1. Power of SD card should use independant Power source just like LDO/PMIC which can turn off it.
2. Per chip type which support SD card should manage current capacity.
( In case of High speed mode, SD Card Power should get margin of 200mA )
3. Do not connect serial component to SD card power, voltage drop can arise at Power line.

# Dual SIM Connector

| | CN9900 | C9901 |
|---|---|---|
| K350ds, K350E, K350Z | EAG64729801 | ECCH0017301 |
| Other model | DNI | DNI |

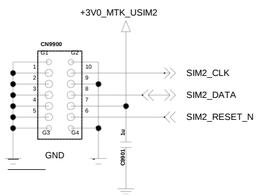


# LCD Contact

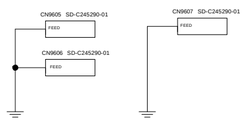


# Side Contact

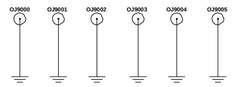


# CAN_SHIELD

Connectivity

RF

# BACK KEY CONNECTOR

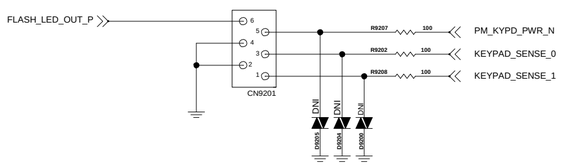


# PID Label

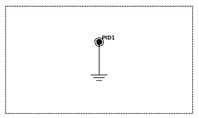

LG Electronics

TITLE: MODEL NAME

| SIZE | DWG NO | REV |
|---|---|---|
| A2 | PDM NUMBER | Rev |

| DRAWN BY | SHEET | Date |
|---|---|---|
| User Name | 1 of 29 | Drawing Date |

**LGE Internal Use Only**

| U2100_MT6735_IC,Digital Baseband Processor(Top View) | U3300_H9TQ17A8GTMCUR,IC,MCP.eMMC(Top View) |
|---|---|
| 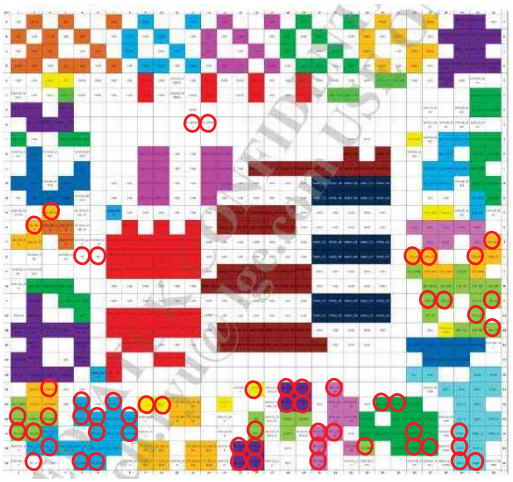 O Not used | 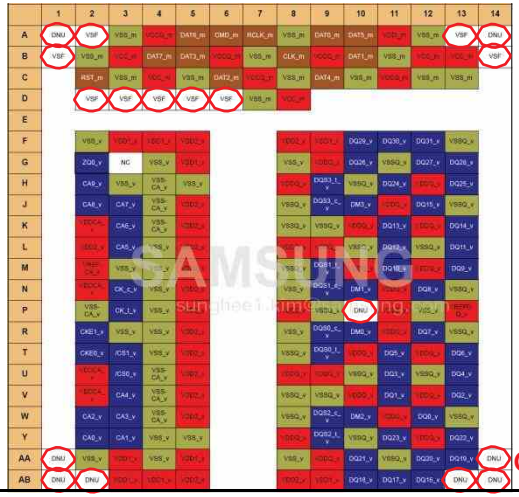 O Not used |
| U4100_MT6328_IC,PMIC (Top View) | |
| 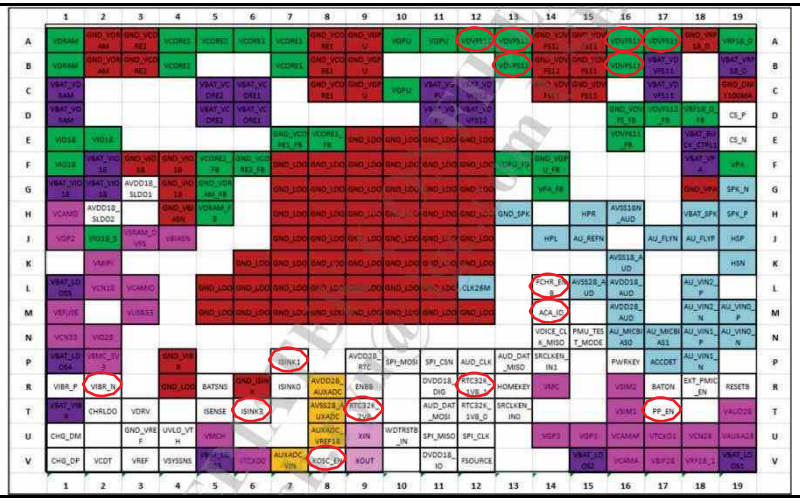 O Not used | |



Copyright © 2015 LG Electronics. Inc. All right reserved. Only training and service purposes

LG-K350ds-MAIN_BOT

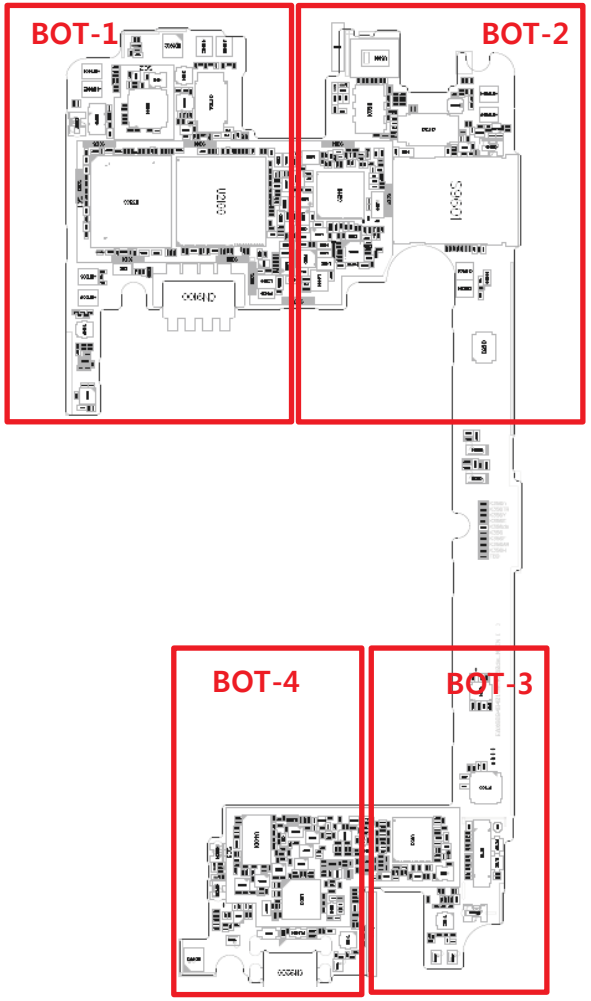




Copyright © 2015 LG Electronics. Inc. All right reserved. Only training and service purposes

## LG-K350DS-MAIN_BOT 1

U6001 - Connectivity MT6625L
No WiFi/ GPS/ FM Radio/Bluetooth

CN9900 – 2nd SIM connector
SIM2 - No service

U3300 - Memory
No Power on

U2100 – AP MT6735
No Power on

FL1003 – B20 LNA
B20 No service

U8100 – Acceleration/Compass
No Sensor

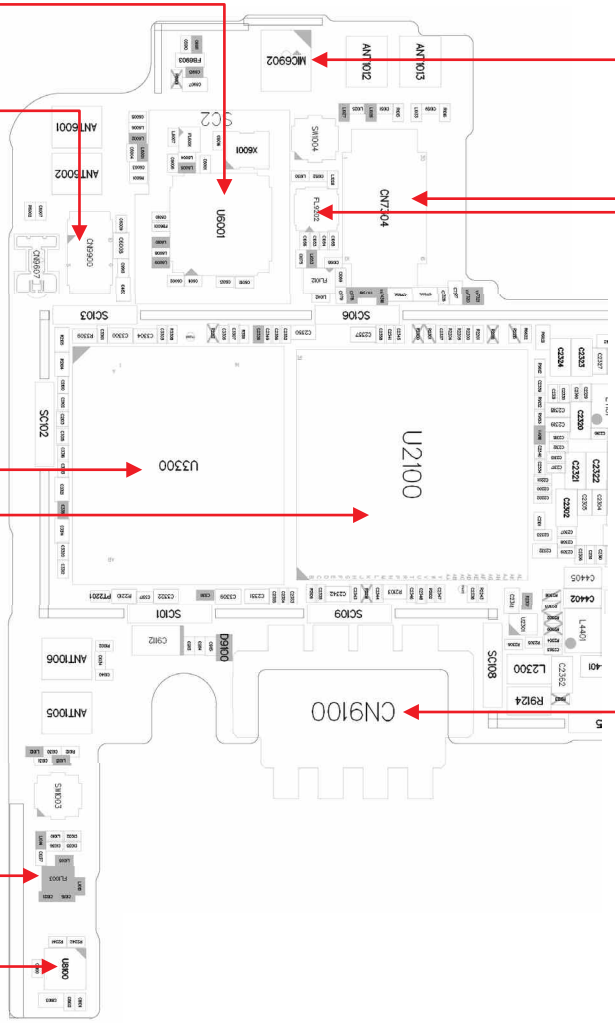
CN9100
U2100
U3300
U6001
CN7304
MIC6902
ANT1013
ANT1012
ANT6001
ANT6002
ANT1006
ANT1005
SC01
SC02
SC03
SC06
SC08
SC09
SC10
SC12
X6001
FL9202
L2300
R9124
C4402
C4405
C2322
C2321
C2320
C2324
C2303
C2302
C2301
C2300
C2302
C2301
C2300
C2304
C2303
C2302
C2301
C2300
C2304
C2303
C2302
C2301
C2300
C2304
C2303

LG-K350DS-MAIN_BOT 2

U8400 – Proximity Sensor
No Proximity

CN9201 – Back Key Connector
No Back Key function/ No Flash

U4100 – PMIC MT6328
No Power on

U4400 – DSV IC
No LCD/ No Flash

U5200 – NFC IC
No NFC service

CN7401 – VT Camera connector
No Camera(VT)

FL6003/ FL6002/ U6002
No GPS service

FL6003/ U1002
No B7 DRX function

S9601 – Combo Socket
No 1st SIM/ SD card service

CN9501/CN9502 – Motor Contact
No Vibrator fuction

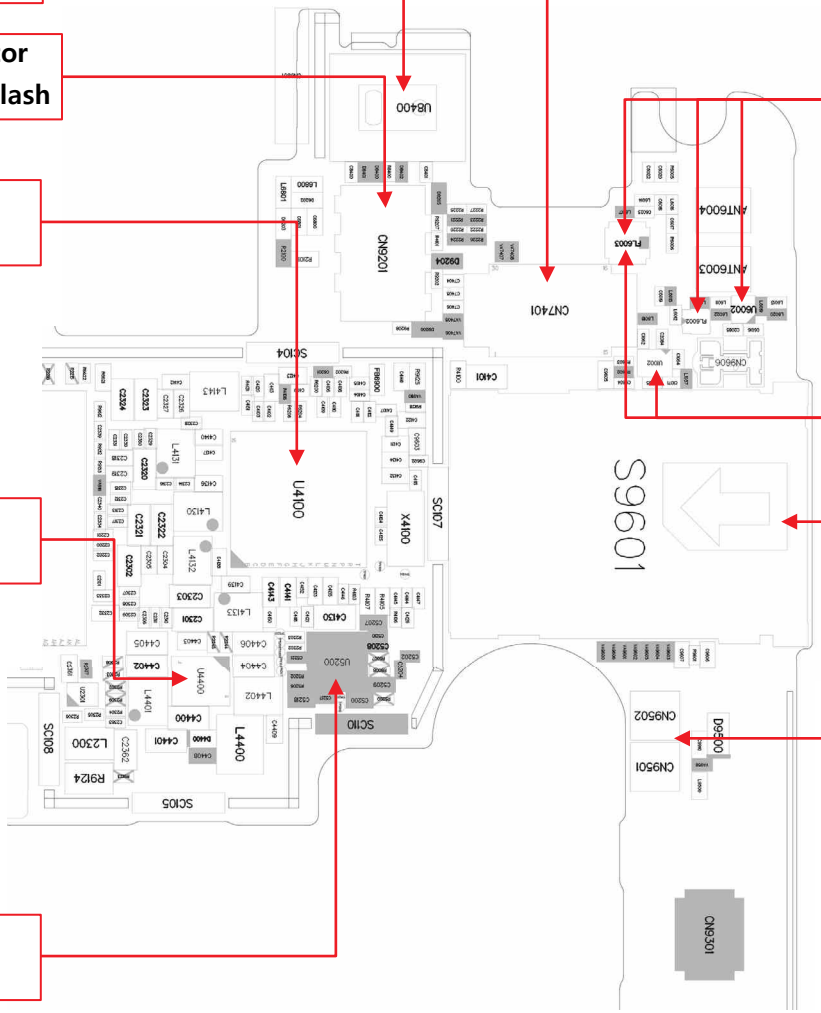




Copyright © 2016 LG Electronics. Inc. All right reserved. Only training and service purposes

LG-K350DS-MAIN_BOT 3

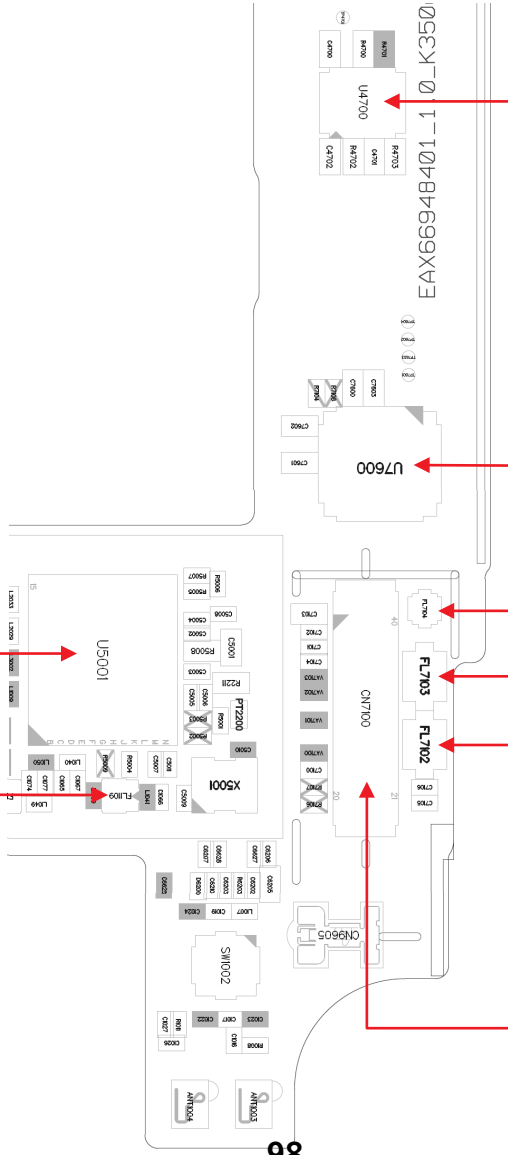


U4700 – Charging IC
No Charging

U7600 – Touch MCU
No Charging

U5001 – RF Transceiver
No service

FL1109 – B7 Filter
No B7 DRX function

FL7104/ FL7103/ FL7102
LCD EMI filter
No LCD

CN7100 LCD Connector
No LCD



Copyright © 2016 LG Electronics. Inc. All right reserved. Only training and service purposes

## LG-K350DS-MAIN_BOT 4

U4001 – MMPA
No Service

ANT6200/6201
- Speaker Contact
No Sound

U3001 – Tx Module
No Service

MIC6901 - MIC
No MIC(Main)

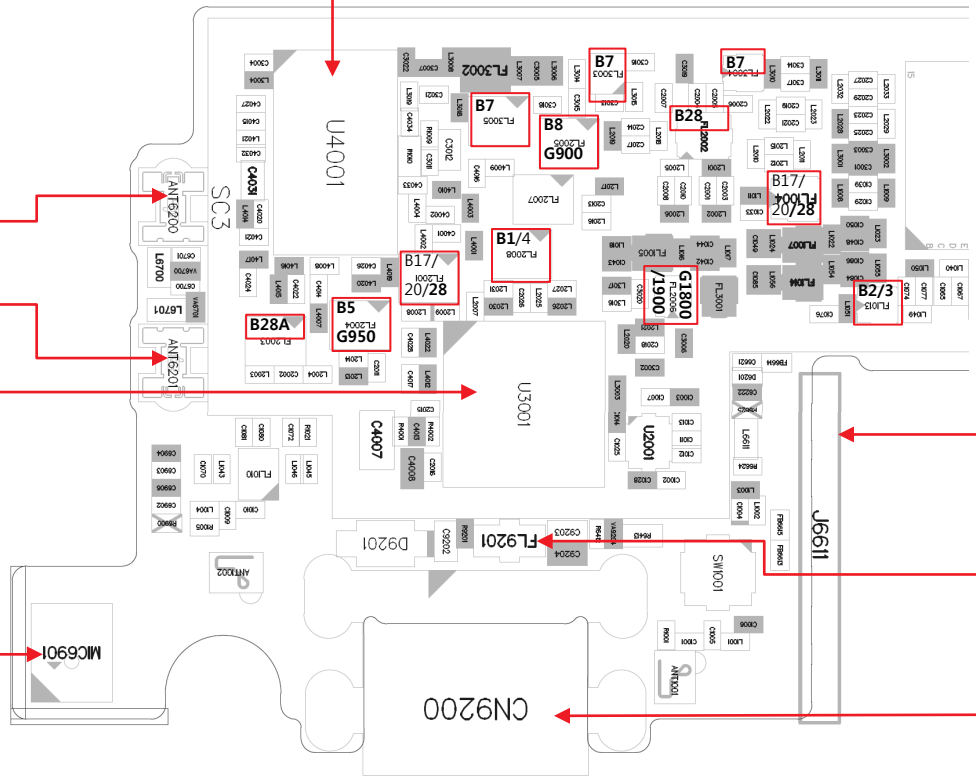


J6611 – Ear-jack
No Ear-mic function

FL9201 – USB EMI filter
No USB

CN9200 – USB Connector
No USB connection
No Charging



Copyright © 2016 LG Electronics. Inc. All right reserved. Only training and service purposes

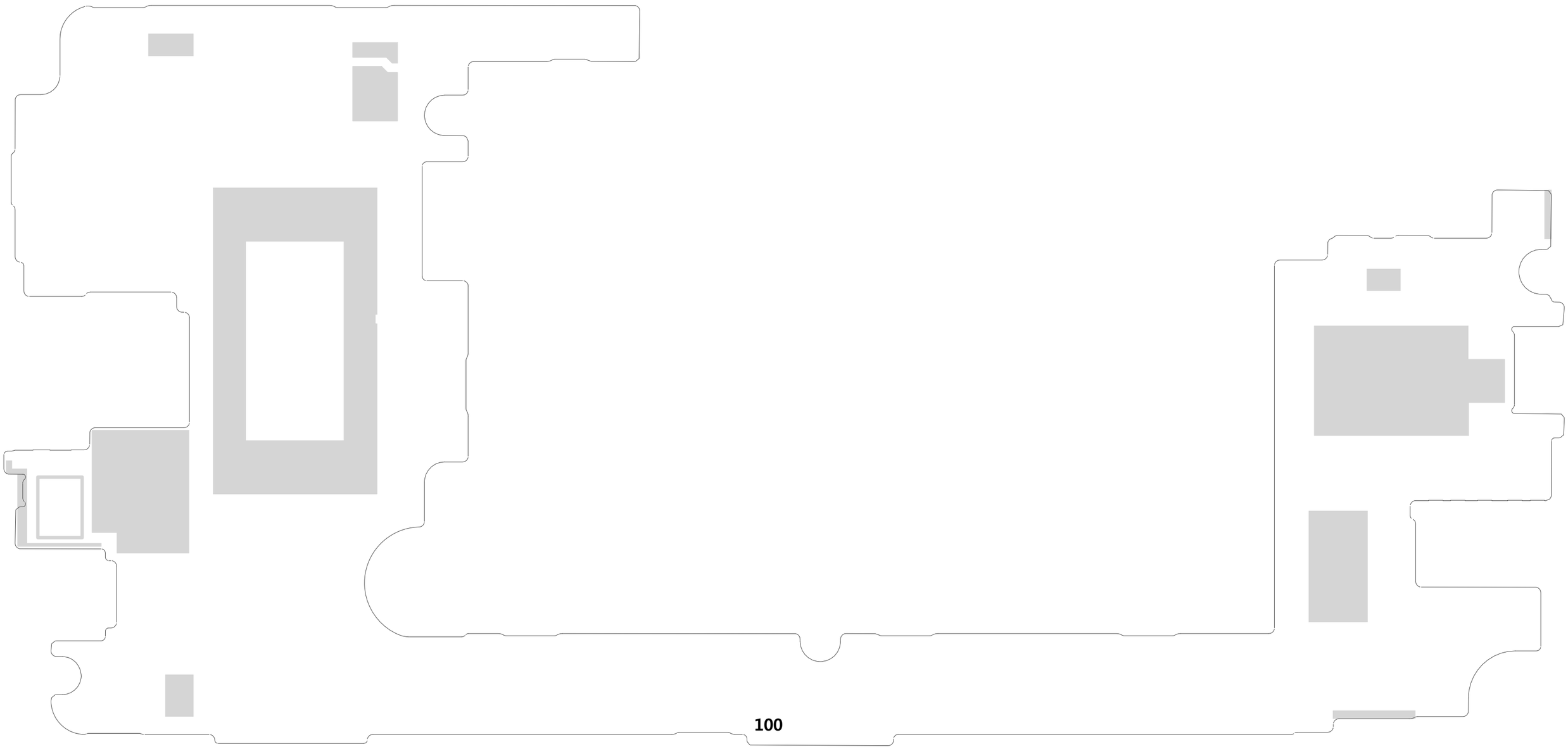

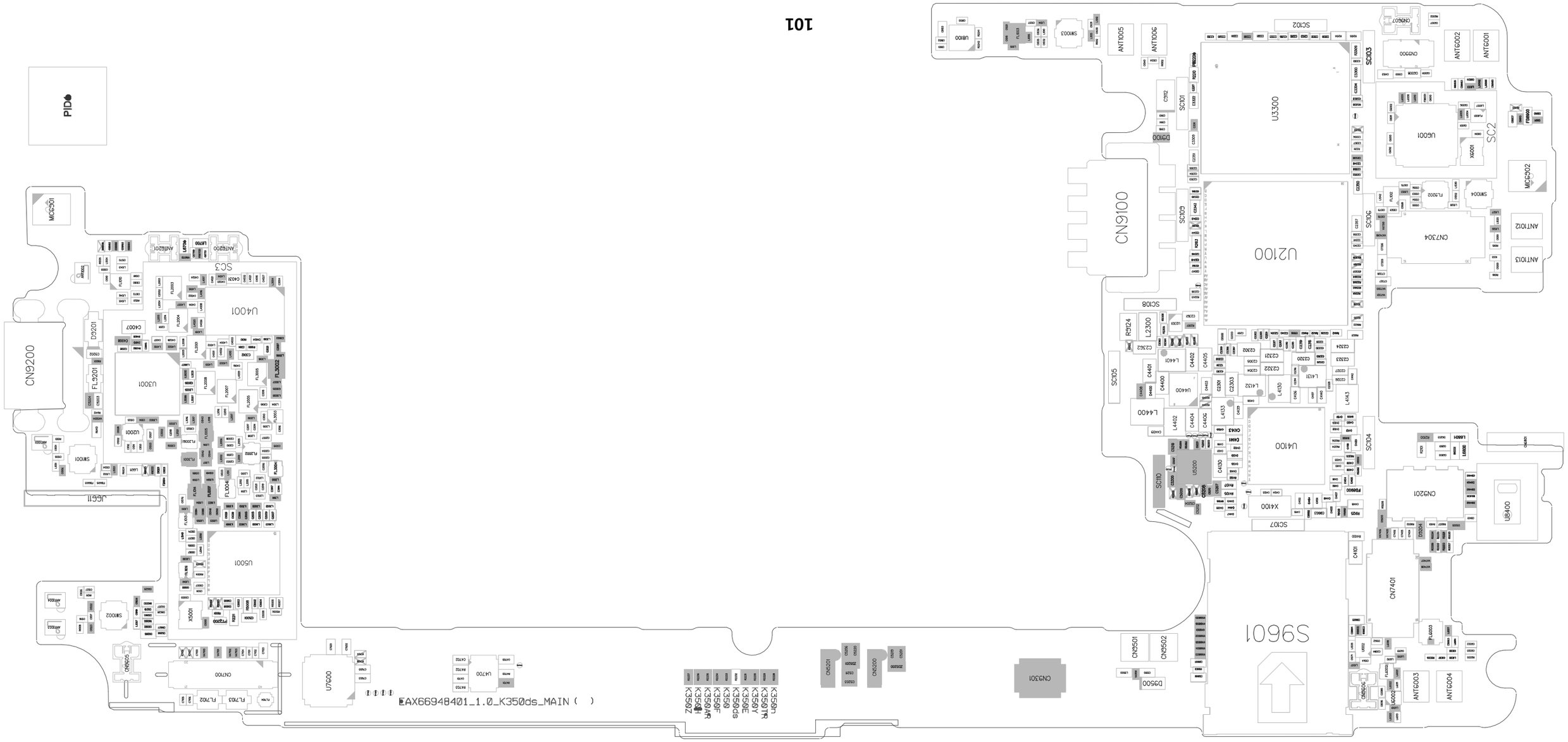
PID
MIC6501
CN9200
U4001
U3001
U2001
U5001
U6511
X5001
SW3002
CN7100
U7600
U4700
EAX66948401_1.0_K350ds_MAIN ( )
CN9100
U2100
U3300
U4100
U5200
U6001
CN7304
CN7401
U8400
CN9201
CN3301
CN9501
CN9502
D9500
S9601
SC2
SC3
SC101
SC102
SC103
SC104
SC105
SC106
SC107
SC108
SC110
ANT6001
ANT6002
ANT6003
ANT6004
ANT7101
ANT7102
ANT9200
ANT9201
ANT3001
ANT3002
MIC6502
SW3004
SW3003
SW3001
CN9500
CN9501
CN9502
CN9506
CN9507
CN9300
CN9301
CN9201
CN9200
CN9100
CN7100
CN7401
CN7304
X4100
X5001
X6001
U8400
U6400
U5200
U4100
U4400
U4700
U3300
U2100
U2001
U3001
U4001
U5001
U6511
U7600
U9100
D9100
D9201
D9500
D9204
FL9201
FL7702
FL7703
FL7704
FL9202
FL9203
FL9204
FL9205
FL9206
FL9207
FL9208
FL9209
FL9210
FL9211
FL9212
FL9213
FL9214
FL9215
FL9216
FL9217
FL9218
FL9219
FL9220
FL9221
FL9222
FL9223
FL9224
FL9225
FL9226
FL9227
FL9228
FL9229
FL9230
FL9231
FL9232
FL9233
FL9234
FL9235
FL9236
FL9237
FL9238
FL9239
FL9240
FL9241
FL9242
FL9243
FL9244
FL9245
FL9246
FL9247
FL9248
FL9249
FL9250
FL9251
FL9252
FL9253
FL9254
FL9255
FL9256
FL9257
FL9258
FL9259
FL9260
FL9261
FL9262
FL9263
FL9264
FL9265
FL9266
FL9267
FL9268
FL9269
FL9270
FL9271
FL9272
FL9273
FL9274
FL9275
FL9276
FL9277
FL9278
FL9279
FL9280
FL9281
FL9282
FL9283
FL9284
FL9285
FL9286
FL9287
FL9288
FL9289
FL9290
FL9291
FL9292
FL9293
FL9294
FL9295
FL9296
FL9297
FL9298
FL9299
FL9300
FL9301
FL9302
FL9303
FL9304
FL9305
FL9306
FL9307
FL9308
FL9309
FL9310
FL9311
FL9312
FL9313
FL9314
FL9315
FL9316
FL9317
FL9318
FL9319
FL9320
FL9321
FL9322
FL9323
FL9324
FL9325
FL9326
FL9327
FL9328
FL9329
FL9330
FL9331
FL9332
FL9333
FL9334
FL9335
FL9336
FL9337
FL9338
FL9339
FL9340
FL9341
FL9342
FL9343
FL9344
FL9345
FL9346
FL9347
FL9348
FL9349
FL9350
FL9351
FL9352
FL9353
FL9354
FL9355
FL9356
FL9357
FL9358
FL9359
FL9360
FL9361
FL9362
FL9363
FL9364
FL9365
FL9366
FL9367
FL9368
FL9369
FL9370
FL9371
FL9372
FL9373
FL9374
FL9375
FL9376
FL9377
FL9378
FL9379
FL9380
FL9381
FL9382
FL9383
FL9384
FL9385
FL9386
FL9387
FL9388
FL9389
FL9390
FL9391
FL9392
FL9393
FL9394
FL9395
FL9396
FL9397
FL9398
FL9399
FL9400
FL9401
FL9402
FL9403
FL9404
FL9405
FL9406
FL9407
FL9408
FL9409
FL9410
FL9411
FL9412
FL9413
FL9414
FL9415
FL9416
FL9417
FL9418
FL9419
FL9420
FL9421
FL9422
FL9423
FL9424
FL9425
FL9426
FL9427
FL9428
FL9429
FL9430
FL9431
FL9432
FL9433
FL9434
FL9435
FL9436
FL9437
FL9438
FL9439
FL9440
FL9441
FL9442
FL9443
FL9444
FL9445
FL9446
FL9447
FL9448
FL9449
FL9450
FL9451
FL9452
FL9453
FL9454
FL9455
FL9456
FL9457
FL9458
FL9459
FL9460
FL9461
FL9462
FL9463
FL9464
FL9465
FL9466
FL9467
FL9468
FL9469
FL9470
FL9471
FL9472
FL9473
FL9474
FL9475
FL9476
FL9477
FL9478
FL9479
FL9480
FL9481
FL9482
FL9483
FL9484
FL9485
FL9486
FL9487
FL9488
FL9489
FL9490
FL9491
FL9492
FL9493
FL9494
FL9495
FL9496
FL9497
FL9498
FL9499
FL9500
FL9501
FL9502
FL9503
FL9504
FL9505
FL9506
FL9507
FL9508
FL9509
FL9510
FL9511
FL9512
FL9513
FL9514
FL9515
FL9516
FL9517
FL9518
FL9519
FL9520
FL9521
FL9522
FL9523
FL9524
FL9525
FL9526
FL9527
FL9528
FL9529
FL9530
FL9531
FL9532
FL9533
FL9534
FL9535
FL9536
FL9537
FL9538
FL9539
FL9540
FL9541
FL9542
FL9543
FL9544
FL9545
FL9546
FL9547
FL9548
FL9549
FL9550
FL9551
FL9552
FL9553
FL9554
FL9555
FL9556
FL9557
FL9558
FL9559
FL9560
FL9561
FL9562
FL9563
FL9564
FL9565
FL9566
FL9567
FL9568
FL9569
FL9570
FL9571
FL9572
FL9573
FL9574
FL9575
FL9576
FL9577
FL9578
FL9579
FL9580
FL9581
FL9582
FL9583
FL9584
FL9585
FL9586
FL9587
FL9588
FL9589
FL9590
FL9591
FL9592
FL9593
FL9594
FL9595
FL9596
FL9597
FL9598
FL9599
FL9600
FL9601
FL9602
FL9603
FL9604
FL9605
FL9606
FL9607
FL9608
FL9609
FL9610
FL9611
FL9612
FL9613
FL9614
FL9615
FL9616
FL9617
FL9618
FL9619
FL9620
FL9621
FL9622
FL9623
FL9624
FL9625
FL9626
FL9627
FL9628
FL9629
FL9630
FL9631
FL9632
FL9633
FL9634
FL9635
FL9636
FL9637
FL9638
FL9639
FL9640
FL9641
FL9642
FL9643
FL9644
FL9645
FL9646
FL9647
FL9648
FL9649
FL9650
FL9651
FL9652
FL9653
FL9654
FL9655
FL9656
FL9657
FL9658
FL9659
FL9660
FL9661
FL9662
FL9663
FL9664
FL9665
FL9666
FL9667
FL9668
FL9669
FL9670
FL9671
FL9672
FL9673
FL9674
FL9675
FL9676
FL9677
FL9678
FL9679
FL9680
FL9681
FL9682
FL9683
FL9684
FL9685
FL9686
FL9687
FL9688
FL9689
FL9690
FL9691
FL9692
FL9693
FL9694
FL9695
FL9696
FL9697
FL9698
FL9699
FL9700
FL9701
FL9702
FL9703
FL9704
FL9705
FL9706
FL9707
FL9708
FL9709
FL9710
FL9711
FL9712
FL9713
FL9714
FL9715
FL9716
FL9717
FL9718
FL9719
FL9720
FL9721
FL9722
FL9723
FL9724
FL9725
FL9726
FL9727
FL9728
FL9729
FL9730
FL9731
FL9732
FL9733
FL9734
FL9735
FL9736
FL9737
FL9738
FL9739
FL9740
FL9741
FL9742
FL9743
FL9744
FL9745
FL9746
FL9747
FL9748
FL9749
FL9750
FL9751
FL9752
FL9753
FL9754
FL9755
FL9756
FL9757
FL9758
FL9759
FL9760
FL9761
FL9762
FL9763
FL9764
FL9765
FL9766
FL9767
FL9768
FL9769
FL9770
FL9771
FL9772
FL9773
FL9774
FL9775
FL9776
FL9777
FL9778
FL9779
FL9780
FL9781
FL9782
FL9783
FL9784
FL9785
FL9786
FL9787
FL9788
FL9789
FL9790
FL9791
FL9792
FL9793
FL9794
FL9795
FL9796
FL9797
FL9798
FL9799
FL9800
FL9801
FL9802
FL9803
FL9804
FL9805
FL9806
FL9807
FL9808
FL9809
FL9810
FL9811
FL9812
FL9813
FL9814
FL9815
FL9816
FL9817
FL9818
FL9819
FL9820
FL9821
FL9822
FL9823
FL9824
FL9825
FL9826
FL9827
FL9828
FL9829
FL9830
FL9831
FL9832
FL9833
FL9834
FL9835
FL9836
FL9837
FL9838
FL9839
FL9840
FL9841
FL9842
FL9843
FL9844
FL9845
FL9846
FL9847
FL9848
FL9849
FL9850
FL9851
FL9852
FL9853
FL9854
FL9855
FL9856
FL9857
FL9858
FL9859
FL9860
FL9861
FL9862
FL9863
FL9864
FL9865
FL9866
FL9867
FL9868
FL9869
FL9870
FL9871
FL9872
FL9873
FL9874
FL9875
FL9876
FL9877
FL9878
FL9879
FL9880
FL9881
FL9882
FL9883
FL9884
FL9885
FL9886
FL9887
FL9888
FL9889
FL9890
FL9891
FL9892
FL9893
FL9894
FL9895
FL9896
FL9897
FL9898
FL9899
FL9900
FL9901
FL9902
FL9903
FL9904
FL9905
FL9906
FL9907
FL9908
FL9909
FL9910
FL9911
FL9912
FL9913
FL9914
FL9915
FL9916
FL9917
FL9918
FL9919
FL9920
FL9921
FL9922
FL9923
FL9924
FL9925
FL9926
FL9927
FL9928
FL9929
FL9930
FL9931
FL9932
FL9933
FL9934
FL9935
FL9936
FL9937
FL9938
FL9939
FL9940
FL9941
FL9942
FL9943
FL9944
FL9945
FL9946
FL9947
FL9948
FL9949
FL9950
FL9951
FL9952
FL9953
FL9954
FL9955
FL9956
FL9957
FL9958
FL9959
FL9960
FL9961
FL9962
FL9963
FL9964
FL9965
FL9966
FL9967
FL9968
FL9969
FL9970
FL9971
FL9972
FL9973
FL9974
FL9975
FL9976
FL9977
FL9978
FL9979
FL9980
FL9981
FL9982
FL9983
FL9984
FL9985
FL9986
FL9987
FL9988
FL9989
FL9990
FL9991
FL9992
FL9993
FL9994
FL9995
FL9996
FL9997
FL9998
FL9999
FL9900
FL9901
FL9902
FL9903
FL9904
FL9905
FL9906
FL9907
FL9908
FL9909
FL9910
FL9911
FL9912
FL9913
FL9914
FL9915
FL9916
FL9917
FL9918
FL9919
FL9920
FL9921
FL9922
FL9923
FL9924
FL9925
FL9926
FL9927
FL9928
FL9929
FL9930
FL9931
FL9932
FL9933
FL9934
FL9935
FL9936
FL9937
FL9938
FL9939
FL9940
FL9941
FL9942
FL9943
FL9944
FL9945
FL9946
FL9947
FL9948
FL9949
FL9950
FL9951
FL9952
FL9953
FL9954
FL9955
FL9956
FL9957
FL9958
FL9959
FL9960
FL9961
FL9962
FL9963
FL9964
FL9965
FL9966
FL9967
FL9968
FL9969
FL9970
FL9971
FL9972
FL9973
FL9974
FL9975
FL9976
FL9977
FL9978
FL9979
FL9980
FL9981
FL9982
FL9983
FL9984
FL9985
FL9986
FL9987
FL9988
FL9989
FL9990
FL9991
FL9992
FL9993
FL9994
FL9995
FL9996
FL9997
FL9998
FL9999

## 1. Hidden Menu Start

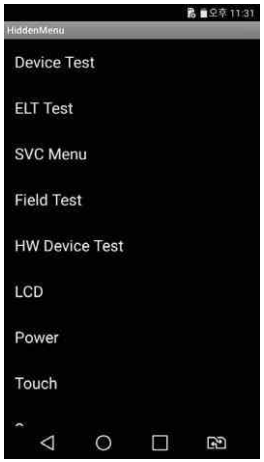


- Start shortcut key:
  *#546368#*350#
- Hidden Menu List
  : Start the desired menu, click

## 2. Device Test - SAAT

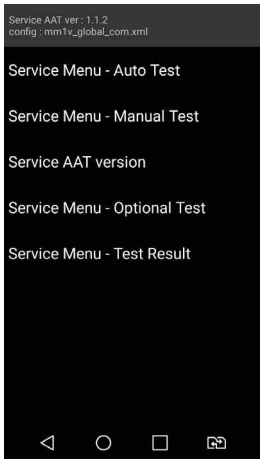


- Service Menu – Auto Test
- Service Menu – Manual Test
- Service AAT version
  → Hidden Menu version Display

## 2. Device Test

- Service Menu – Auto Test
  → All Test Items are continued one after another.
  → Continuous information on the menu, giving you ability test.

## 3. Device test List

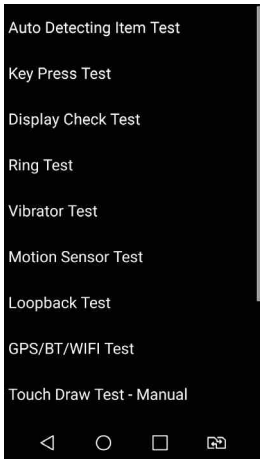


- Service Menu – Manual Test
  → Each test item can be selected and performed by user.


Copyright © 2015 LG Electronics. Inc. All right reserved. Only training and service purposes

| 1. Auto Detecting Item Test | 2. Key Press Test | 3. Display Check Test (1) | 4. Display Check Test (2) |
|---|---|---|---|
| | 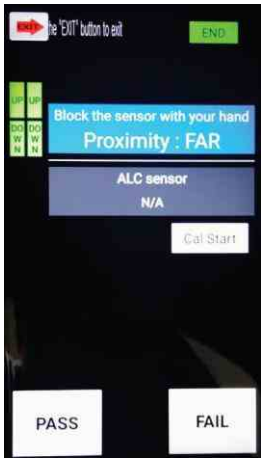  | | 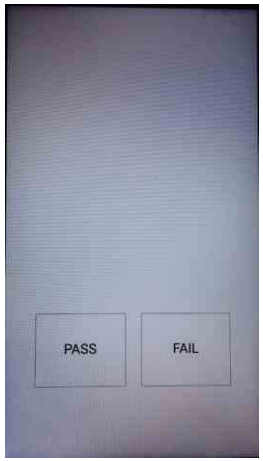  |
| 5. Ring Test | 6. Vibrator Test | 7. Motion Sensor Test | 8. Loop Back Test |
| | 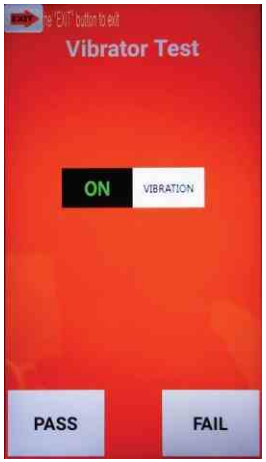  | 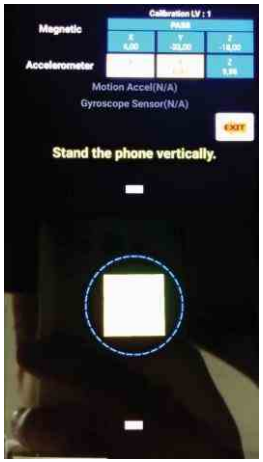  | |



Copyright © 2015 LG Electronics. Inc. All right reserved. Only training and service purposes

| 9. GPS/BT/WiFi Test | 10. Touch Draw Test | 11. Camera Test (Main) | 12. Camcorder Test |
|---|---|---|---|
| 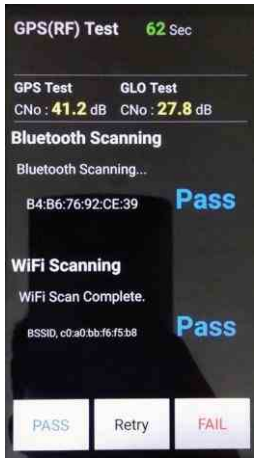 | 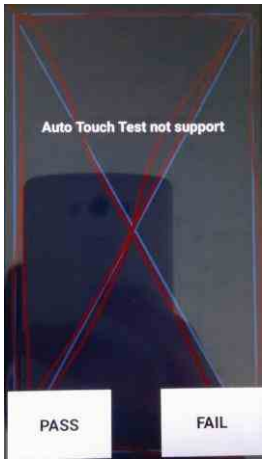 | | 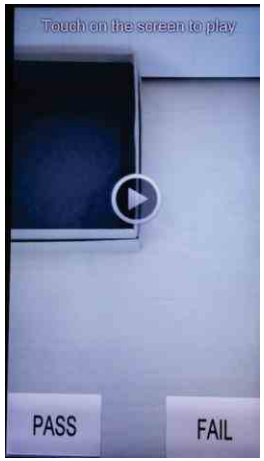 |
| 13. Camera Test (VT) | 14. FM Radio Test | | |
| | 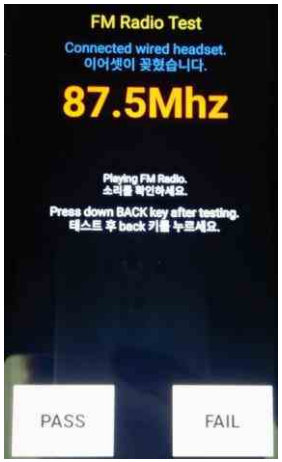 | | |



Copyright © 2015 LG Electronics. Inc. All right reserved. Only training and service purposes

## 1. Summary

| Tool Version | DLL name | USB Driver | |
|---|---|---|---|
| LGFlash Tool V201 | LGK350ds_20160204_LGFLASHv215_Download.dll | LGUnitedMobileDriver_S52MAN314AP22_ML_WHQL_Ver_3.14.1 | |
| Please Check the Version to "LGST ServiceCenter Tool" | | | |
| H/W | | | |
| | Name | Part No. | SW |
| D/L Cable | Micro 5P (56-open-910K) USB DLC | RAD32167835 | KDZ |

## 2. . USB COM port Setting

## 3. USB D/L Cable setting

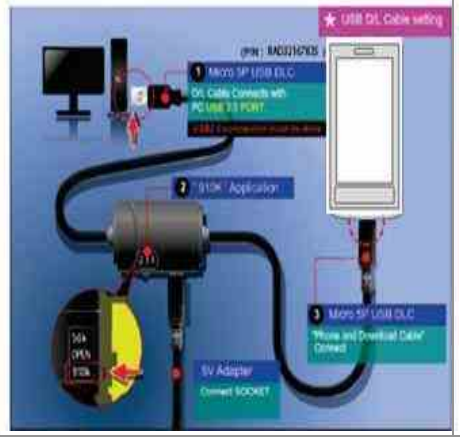


## 4. Flash tool D/L setting

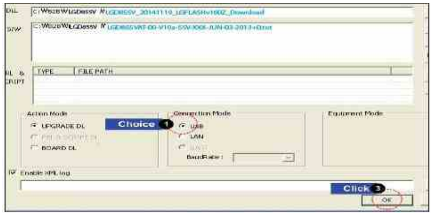


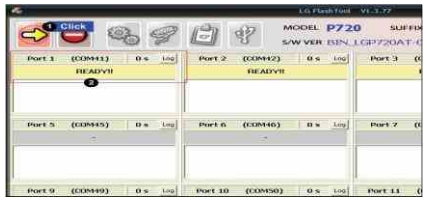

※ If you want more information, please refer LGST ServiceCenter Tool's Notification"Download User Guide".



Copyright © 2016 LG Electronics. Inc. All right reserved. Only training and service purposes

## 1. Summary

| CAL INFORMATION | | |
|---|---|---|
| S/W VERSION | | |
| Tachyon 509 | | |
| Please Check the Version to "B2B" | | |
| H/W | | |
| | Name | Part No. |
| PIF | PIF200 | BJAY0024021 |
| USB Cable | USB Cable | RAD32247898 |
| Power Cable | DC Power Cable | RAD32247878 |
| I/O Cable | 5P E-SATA DC Plug | |
| RF Cable_Main | MXFJK1WT4000C2 | |
| Power Supply_PIF | DC 5.0V 2.0A | |
| Power Supply_Phone | Power supply control | |
| PF Test Equipment | | |
| Notice | 1. Use the Battery (Refer to Attached ppt)<br>1) Phone states: Power off<br>2) If do not use the battery, TX fails.<br>2. Port Setting (Refer to Attached ppt)<br>1) Uart Port1 : Use the "LGE Mobile USB Serial Port" | |
| CMW 500 RF Cable connection | | |

## 2. . USB COM port Setting

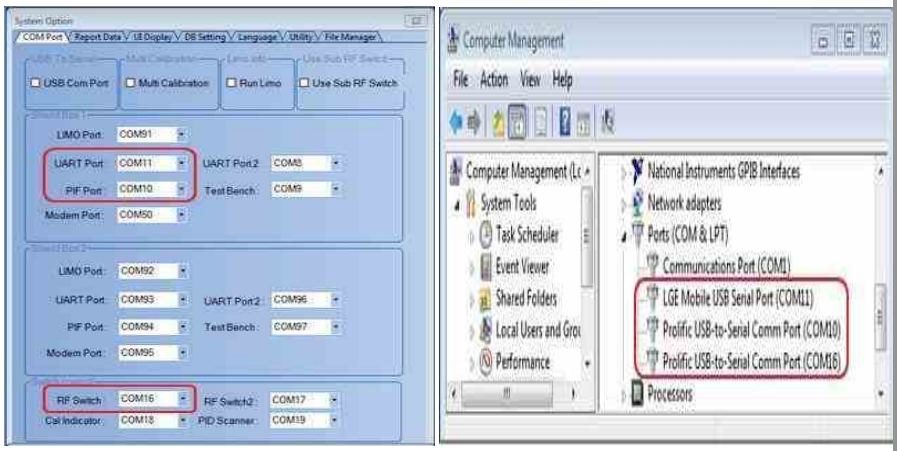


## 3. Calibration Cable setting

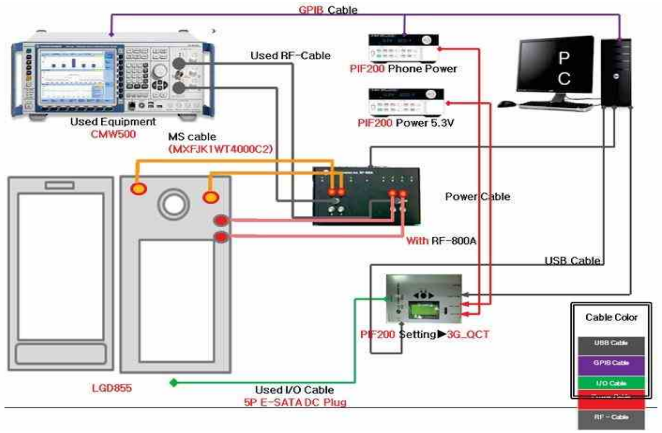


## 4. Tachyon setting

**※ If you want more information, please refer LGST ServiceCenter Tool's Notification "RF Calibration User Guide".**



Copyright © 2016 LG Electronics. Inc. All right reserved. Only training and service purposes

| 1. Disassemble Screw (9ea) | 2. Disassemble Rear cover | 3. Disassemble Main Antenna | 4. Disassemble Connector |
|---|---|---|---|
| | | | 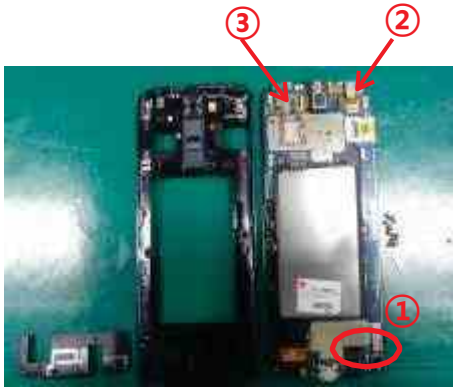 |
| **5. Disassemble Main PCB** | **6. Disassemble HW Parts (4ea)** | **7. LCD Disassemble (by Heating machine)** | **8. Complete Disassembling** |
| 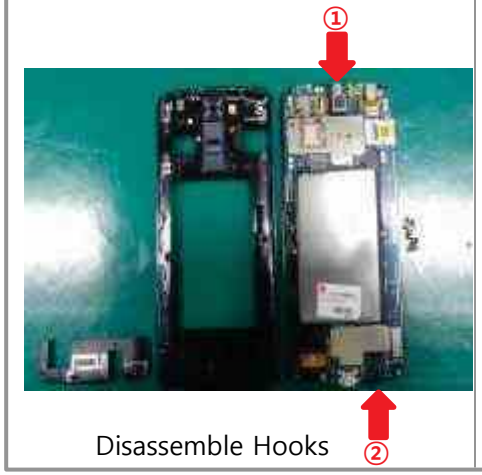 <br>Disassemble Hooks | | | |



Copyright © 2016 LG Electronics. Inc. All right reserved. Only training and service purposes

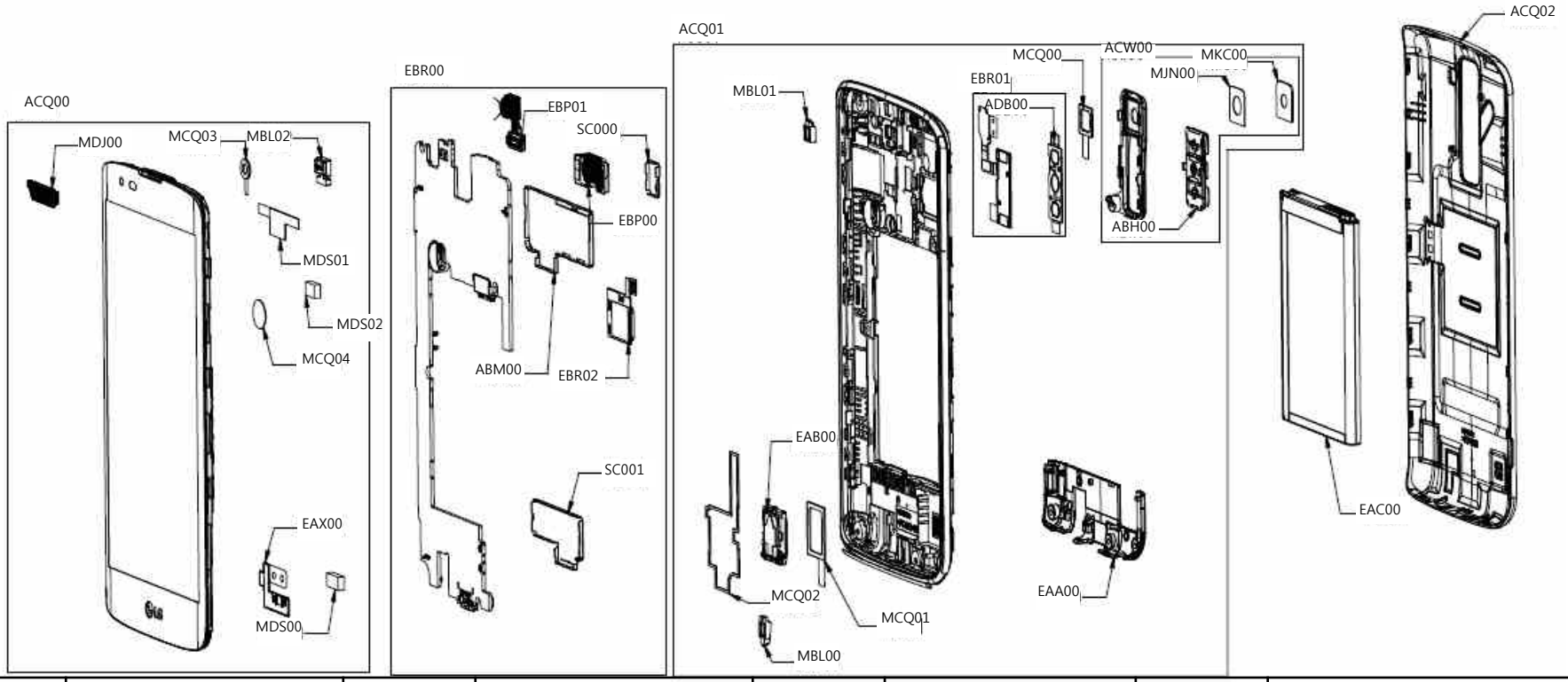


| Location | Description | Location | Description | Location | Description | Location | Description |
|---|---|---|---|---|---|---|---|
| ACQ01 | Cover Assembly,Rear | MBL00 | Cap | MDJ00 | Filter | EBR02 | PCB Assembly,Flexible |
| EBR01 | PCB Assembly,Flexible | ACW00 | Decor Assembly | MDS00 | Gasket | EBP01 | Camera Module |
| ADB00 | Dome Assembly,Metal | ABH00 | Button Assembly | MDS01 | Gasket | EBP00 | Camera Module |
| MBL01 | Cap | MKC00 | Window,Camera | MDS02 | Gasket | ABM00 | Can Assembly,Shield |
| MCQ01 | Damper,Speaker | MJN00 | Tape,Camera | MCQ03 | Damper,Camera | SC000 | Can,Shield |
| MCQ02 | Damper,Speaker | EAA00 | PIFA Antenna,Multiple | EAX00 | PCB,Flexible | SC001 | Can,Shield |
| EAB00 | Speaker,Dual Mode | ACQ00 | Cover Assembly | MBL02 | Cap | ACQ02 | Cover Assembly,Battery |
| MCQ00 | Damper,Camera | MCQ04 | Damper,Motor | EBR00 | PCB Assembly,Main | EAC00 | Rechargeable Battery,Lithium Ion |



Copyright © 2016 LG Electronics. Inc. All right reserved. Only training and service purposes

| No | P/N | Description | Quantity | Location no |
|---|---|---|---|---|
| 1 | AGQ88829601 | Phone Assembly | 1 | AGQ000000 |
| 2 | GMEY0014301 | Screw,Machine | 9 | FAB010000 |
| 3 | ACQ88692701 | Cover Assembly,EMS | 1 | ACQ100400 |
| 4 | ACQ88658801 | Cover Assembly,Rear | 1 | ACQ01 |
| 5 | ACQ88870801 | Cover Assembly,Rear(SVC) | 1 | ACQ105800 |
| 6 | EAA64387801 | PIFA Antenna,Multiple | 1 | EAA030100 |
| 7 | EAA64387901 | PIFA Antenna,GPS | 1 | EAA030103 |
| 8 | EAA64406901 | PIFA Antenna,Multiple | 1 | EAA030101 |
| 9 | EBR81943302 | PCB Assembly,Flexible | 1 | EBR01 |
| 10 | EBR81924702 | PCB Assembly,Flexible,Insert | 1 | EBR070100 |
| 11 | ADB74718201 | Dome Assembly,Metal | 1 | ADB00 |
| 12 | MJN69991301 | Tape | 1 | MJN000000 |
| 13 | MJN69991201 | Tape | 1 | MJN000001 |
| 14 | EBR81964502 | PCB Assembly,Flexible,SMT | 1 | EBR070400 |
| 15 | EBR81964602 | PCB Assembly,Flexible,SMT Top | 1 | EBR070300 |
| 16 | EAX66917901 | PCB,Flexible | 1 | EAX010700 |
| 17 | EBR81981902 | PCB Assembly,Flexible,SMT Bottom | 1 | EBR070200 |
| 18 | EAV63412401 | LED,Flash | 1 | LD1001 |
| 19 | MBL66937001 | Cap | 1 | MBL01 |
| 20 | MCK69185701 | Cover,Rear | 1 | MCK063300 |
| 21 | MCQ68765101 | Damper,Speaker | 1 | MCQ01 |
| 22 | MCQ68825101 | Damper,Speaker | 1 | MCQ02 |
| 23 | MDJ64944301 | Filter | 1 | MDJ000000 |
| 24 | EAA64347201 | PIFA Antenna,WiFi | 1 | EAA030102 |
| 25 | MEZ64319901 | Label,After Service | 1 | MEZ000900 |
| 26 | MFB64293301 | Lens,Flash | 1 | MFB029600 |
| 27 | MJN69947901 | Tape,Protect | 2 | MJN061101 |
| 28 | MJN69987301 | Tape | 1 | MJN000000 |
| 29 | MJN69947801 | Tape,Protect | 2 | MJN061100 |
| 30 | EAB64229101 | Speaker,Dual Mode | 1 | EAB00 |
| 31 | EAU63423201 | Motor,DC | 1 | EAU010000 |
| 32 | MCQ68765001 | Damper,Camera | 1 | MCQ00 |
| 33 | MBL66937101 | Cap | 1 | MBL00 |
| 34 | ACW75337301 | Decor Assembly | 1 | ACW00 |
| 35 | MCR66527101 | Decor | 1 | MCR000000 |
| 36 | ABH75839701 | Button Assembly | 1 | ABH00 |
| 37 | MBG66143401 | Button | 1 | MBG000000 |
| 38 | MJN69947601 | Tape,Protect | 1 | MJN061100 |
| 39 | MBG66103501 | Button | 1 | MBG000001 |
| 40 | MKC66019001 | Window,Camera | 1 | MKC00 |
| 41 | MJN69947701 | Tape,Camera | 1 | MJN00 |
| 42 | EAA64347101 | PIFA Antenna,Multiple | 1 | EAA00 |
| 43 | ACQ88697001 | Cover Assembly,Bar | 1 | ACQ003400 |
| 44 | ACQ88830201 | Cover Assembly | 1 | ACQ00 |



Copyright © 2016 LG Electronics. Inc. All right reserved. Only training and service purposes

| No | P/N | Description | Quantity | Location no |
|---|---|---|---|---|
| 45 | ACQ88695101 | Cover Assembly,Front | 1 | ACQ032700 |
| 46 | ACQ88636101 | Cover Assembly,Front(Sub) | 1 | ACQ033200 |
| 47 | MICE0016903 | Insert,Nut | 9 | MET099500 |
| 48 | MCK69165701 | Cover,Front | 1 | MCK032700 |
| 49 | MCQ68764901 | Damper | 1 | MCQ000000 |
| 50 | MCQ68824901 | Damper,Motor | 1 | MCQ04 |
| 51 | MDJ64944201 | Filter | 1 | MDJ00 |
| 52 | MJN69987101 | Tape | 1 | MJN000000 |
| 53 | MJN70027001 | Tape | 1 | MJN000001 |
| 54 | MHK65565801 | Sheet | 1 | MHK000000 |
| 55 | EAB63888801 | Receiver | 1 | EAB010400 |
| 56 | EAT63233101 | Module,Hybrid Touch LCD | 1 | EAT130000 |
| 57 | MDS65593001 | Gasket | 1 | MDS00 |
| 58 | MDS65634301 | Gasket | 1 | MDS01 |
| 59 | MDS65634401 | Gasket | 1 | MDS02 |
| 60 | MCQ68825001 | Damper,Camera | 1 | MCQ03 |
| 61 | EAG63849801 | Jack,Phone | 1 | EAG140300 |
| 62 | EAX66949701 | PCB,Flexible | 1 | EAX00 |
| 63 | MBL66841401 | Cap | 1 | MBL02 |
| 64 | EBR81969301 | PCB Assembly,Main | 1 | EBR00 |
| 65 | EBR82558901 | PCB Assembly,Main,Insert | 1 | EBR071500 |
| 66 | EBR81943301 | PCB Assembly,Flexible | 1 | EBR02 |
| 67 | EBR81964501 | PCB Assembly,Flexible,SMT | 1 | EBR070400 |
| 68 | EBR81964601 | PCB Assembly,Flexible,SMT Top | 1 | EBR070300 |
| 69 | EAX66903401 | PCB,Flexible | 1 | EAX010700 |
| 70 | EAG64749801 | Connector,BtoB | 1 | CN10001 |
| 71 | EBR81981901 | PCB Assembly,Flexible,SMT Bottom | 1 | EBR070200 |
| 72 | EAE62286801 | Capacitor,Ceramic,Chip | 1 | C10001 |
| 73 | ECCH0009514 | Capacitor,Ceramic,Chip | 2 | C10000,C10002 |
| 74 | EAG64650901 | Socket,DIMM/SIMM | 1 | J10001 |
| 75 | EBR81924701 | PCB Assembly,Flexible,Insert | 1 | EBR070100 |
| 76 | MJN69970501 | Tape | 1 | MJN000000 |
| 77 | EBP62722501 | Camera Module | 1 | EBP01 |
| 78 | EBP62702201 | Camera Module | 1 | EBP00 |
| 79 | RAA34549101 | Resin,PC | 0 | RAA050100 |
| 80 | ABM75356101 | Can Assembly,Shield | 1 | ABM00 |
| 81 | MBK64774301 | Can,Shield | 1 | MBK070300 |
| 82 | MEV65913601 | Insulator | 1 | MEV000000 |
| 83 | MCQ68904601 | Damper | 1 | MCQ000000 |
| 84 | EBR81969401 | PCB Assembly,Main,SMT | 1 | EBR071800 |
| 85 | EBR82579601 | PCB Assembly,Main,SMT Bottom | 1 | EBR071600 |
| 86 | EAM63170001 | Filter,EMI/Power | 2 | FL7102,FL7103 |
| 87 | EAM63290701 | Filter,Duplexer | 1 | FL2003 |
| 88 | EAM63390701 | Filter,Saw | 1 | FL2006 |
| 89 | EAM63431001 | Filter,Duplexer | 1 | FL2001 |



Copyright © 2016 LG Electronics. Inc. All right reserved. Only training and service purposes

| No | P/N | Description | Quantity | Location no |
|---|---|---|---|---|
| 90 | EAM63651001 | Filter,Separator,Switch | 1 | FL9202 |
| 91 | EAM63670001 | Filter,Saw | 1 | FL6001 |
| 92 | EAM63910601 | Filter,Saw | 2 | FL1109,FL3004 |
| 93 | EAM63930901 | Filter,Saw | 1 | FL1013 |
| 94 | EAM63950001 | Filter,Separator,Switch | 1 | U2001 |
| 95 | EAM63950301 | Filter,Duplexer | 1 | FL2008 |
| 96 | EAM63950701 | Filter,Duplexer | 1 | FL2005 |
| 97 | EAM63970401 | Filter,Duplexer | 1 | FL3005 |
| 98 | EAM63990101 | Filter,Duplexer | 1 | FL2007 |
| 99 | EAM63990501 | Filter,Duplexer | 1 | FL2004 |
| 100 | EAM63990701 | Filter,Saw | 1 | FL1004 |
| 101 | EAM63991901 | Filter,Separator,Switch | 1 | FL1010 |
| 102 | EAN62677301 | IC,Charger | 1 | U4700 |
| 103 | EAN62736101 | IC,RF Amplifier | 1 | U6002 |
| 104 | EAN63325801 | IC,RF Amplifier | 1 | FL3003 |
| 105 | EAN63406501 | IC,RF Transceiver,4G | 1 | U5001 |
| 106 | EAN63486501 | IC,WiFi | 1 | U6001 |
| 107 | EAN63646901 | IC,MCP,eMMC | 1 | U3300 |
| 108 | EAN63748001 | IC,PMIC | 1 | U4100 |
| 109 | EAN63788301 | IC,RF Amplifier | 1 | U1002 |
| 110 | EAN63807901 | IC,RF Amplifier | 1 | FL1012 |
| 111 | EAN63886901 | IC,Acceleration Sensor | 1 | U8100 |
| 112 | EAN64011501 | IC,Capacitive Touch Sensor | 1 | U7600 |
| 113 | EAN64028901 | IC,Sub PMIC | 1 | U4400 |
| 114 | EAN64107501 | IC,Power Amplifier | 1 | U4001 |
| 115 | EAN64130701 | IC,Proximity | 1 | U8400 |
| 116 | EAN64153301 | IC,Digital Baseband Processor,4G | 1 | U2100 |
| 117 | EAP61866301 | Inductor,Multilayer,Chip | 1 | L1035 |
| 118 | EAP61866601 | Inductor,Multilayer,Chip | 1 | L1004 |
| 119 | EAP61866701 | Inductor,Multilayer,Chip | 7 | L1002,L1007,L1010,L1028,L6006,L6008,L6014 |
| 120 | EAP62106301 | Inductor,Wire Wound,Chip | 1 | L4400 |
| 121 | EAP62108001 | Inductor,Multilayer,Chip | 2 | C2023,C2025 |
| 122 | EAP62946701 | Inductor,Wire Wound,Chip | 1 | L4143 |
| 123 | EAP63185901 | Inductor,Multilayer,Chip | 1 | L4401 |
| 124 | EAP63626601 | Inductor,Multilayer,Chip | 1 | L4402 |
| 125 | EAT63233201 | Module,Tx Module | 1 | U3001 |
| 126 | EAW62943601 | Oscillator,VCTCXO | 1 | X5001 |
| 127 | EAW63023701 | Oscillator,TCXO | 1 | X6001 |
| 128 | EBC61977001 | Resistor,Chip | 1 | R4103 |
| 129 | EBC62035901 | Resistor,Chip | 1 | R4131 |
| 130 | EBG62665701 | Thermistor,NTC | 2 | PT2200,PT2201 |
| 131 | ECCH0000115 | Capacitor,Ceramic,Chip | 4 | C9203,C9605,C9606,C9607 |
| 132 | ECCH0000127 | Capacitor,Ceramic,Chip | 1 | C7103 |
| 133 | ECCH0000198 | Capacitor,Ceramic,Chip | 8 | C2350,C2351,C3304,C3322,C4113,C5001,C6205,C7327 |
| 134 | ECCH0004904 | Capacitor,Ceramic,Chip | 11 | C2332,C3314,C3321,C4148,C4153,C7326,C7600,C7601,C7602,C8103,C9910 |



Copyright © 2016 LG Electronics. Inc. All right reserved. Only training and service purposes

| No | P/N | Description | Quantity | Location no |
|---|---|---|---|---|
| 135 | ECCH0007804 | Capacitor,Ceramic,Chip | 10 | C3012,C4031,C4131,C4132,C4133,C4134,C4135,C4137,C4138,C4142 |
| 136 | ECCH0007805 | Capacitor,Ceramic,Chip | 1 | C4141 |
| 137 | ECCH0009101 | Capacitor,Ceramic,Chip | 47 | C2100,C2101,C2102,C2200,C2201,C2202,C2333,C2334,C2335,C2337,C2338,C2339,C2340,C2341,C2343,C2344,C2347,C2349,C2352,C2353,C2354,C2355,C2356,C3306,C3312,C3313,C3316,C3317,C3320,C4115,C4144,C5002,C5003,C5004,C5005,C5006,C5007,C5008,C5009,C5011,C6001,C6016,C6903,C6910,C8100,C8101,C8102 |
| 138 | ECCH0009102 | Capacitor,Ceramic,Chip | 2 | C6206,C6207 |
| 139 | ECCH0009105 | Capacitor,Ceramic,Chip | 4 | C7101,C7102,C7105,C7106 |
| 140 | ECCH0009107 | Capacitor,Ceramic,Chip | 2 | C1013,C1056 |
| 141 | ECCH0009216 | Capacitor,Ceramic,Chip | 2 | C4017,C4125 |
| 142 | ECCH0009217 | Capacitor,Ceramic,Chip | 1 | C4028 |
| 143 | ECCH0009228 | Capacitor,Ceramic,Chip | 2 | C3011,C6011 |
| 144 | ECCH0009506 | Capacitor,Ceramic,Chip | 1 | C4124 |
| 145 | ECCH0017301 | Capacitor,Ceramic,Chip | 47 | C2103,C2306,C2307,C2308,C2309,C2310,C2311,C2312,C2313,C2314,C2315,C2316,C2317,C2328,C2329,C2330,C2331,C2348,C3307,C3315,C4104,C4105,C4106,C4107,C4108,C4109,C4110,C4111,C4112,C4145,C4147,C4149,C4150,C4151,C4152,C6012,C6014,C7100,C7104,C7328,C7404,C7405,C7406,C8400,C8401,C9604,C9901 |
| 146 | ECCH0017601 | Capacitor,Ceramic,Chip | 14 | C2304,C2305,C2318,C2319,C2326,C2327,C2342,C2357,C3309,C4122,C4123,C6008,C7309,C9603 |
| 147 | ECCH0032801 | Capacitor,Ceramic,Chip | 3 | C2345,C2346,C3303 |
| 148 | ECZH0000813 | Capacitor,Ceramic,Chip | 1 | C7603 |
| 149 | ECZH0000830 | Capacitor,Ceramic,Chip | 3 | C6800,C6801,C6907 |
| 150 | ECZH0001215 | Capacitor,Ceramic,Chip | 2 | C4700,C4701 |
| 151 | EDSY0010501 | Diode,Switching | 1 | D9500 |
| 152 | ELCH0001444 | Inductor,Multilayer,Chip | 2 | L6700,L6701 |
| 153 | ELCH0003842 | Inductor,Multilayer,Chip | 1 | L6611 |
| 154 | ELCH0005009 | Inductor,Multilayer,Chip | 1 | L9500 |
| 155 | ENBY0040701 | Connector,BtoB | 2 | CN7304,CN7401 |
| 156 | ENZY0025801 | Terminal Block | 1 | CN9201 |
| 157 | ERHY0000166 | Resistor,Chip | 2 | R2210,R2211 |
| 158 | ERHY0009302 | Resistor,Chip | 1 | R9128 |
| 159 | ERHY0009312 | Resistor,Chip | 1 | R2102 |
| 160 | ERHY0009316 | Resistor,Chip | 6 | R1002,R1005,R1011,R1016,R6002,R6005 |
| 161 | ERHY0009501 | Resistor,Chip | 3 | FB6001,R1009,R9603 |
| 162 | ERHY0009503 | Resistor,Chip | 6 | R5006,R5007,R9133,R9202,R9207,R9208 |
| 163 | ERHY0009504 | Resistor,Chip | 5 | R4101,R5001,R5004,R6200,R6202 |
| 164 | ERHY0009505 | Resistor,Chip | 2 | R4001,R9601 |
| 165 | ERHY0009507 | Resistor,Chip | 7 | R1001,R1008,R1012,R1015,R6001,R6006,R9612 |
| 166 | ERHY0009511 | Resistor,Chip | 2 | R4106,R6203 |
| 167 | ERHY0009516 | Resistor,Chip | 2 | R2202,R2203 |
| 168 | ERHY0009519 | Resistor,Chip | 1 | R4002 |
| 169 | ERHY0009522 | Resistor,Chip | 1 | R6624 |
| 170 | ERHY0009526 | Resistor,Chip | 8 | R2200,R2201,R2204,R2205,R2241,R2242,R8400,R9132 |
| 171 | ERHY0009527 | Resistor,Chip | 2 | R2243,R6622 |
| 172 | ERHY0009531 | Resistor,Chip | 1 | R5005 |
| 173 | ERHY0017901 | Resistor,Chip | 1 | R6412 |
| 174 | ERHY0035601 | Resistor,Chip | 1 | R9124 |



Copyright © 2016 LG Electronics. Inc. All right reserved. Only training and service purposes

| No | P/N | Description | Quantity | Location no |
|---|---|---|---|---|
| 175 | ERHY0042406 | Resistor,Chip | 2 | R3308,R3311 |
| 176 | ERHZ0000220 | Resistor,Chip | 1 | R2103 |
| 177 | ERHZ0000236 | Resistor,Chip | 1 | R5008 |
| 178 | ERHZ0000250 | Resistor,Chip | 1 | R3309 |
| 179 | ERHZ0000278 | Resistor,Chip | 1 | R4703 |
| 180 | ERHZ0000295 | Resistor,Chip | 1 | R4107 |
| 181 | ERHZ0000308 | Resistor,Chip | 1 | R9125 |
| 182 | ERHZ0000310 | Resistor,Chip | 1 | R4702 |
| 183 | ERHZ0000319 | Resistor,Chip | 2 | R2104,R2105 |
| 184 | ERHZ0000406 | Resistor,Chip | 2 | R2101,R2232 |
| 185 | ERHZ0000486 | Resistor,Chip | 1 | R4700 |
| 186 | ERHZ0000487 | Resistor,Chip | 1 | R6621 |
| 187 | ERHZ0000529 | Resistor,Chip | 1 | R4100 |
| 188 | ERHZ0000537 | Resistor,Chip | 1 | R6413 |
| 189 | ERHZ0000538 | Resistor,Chip | 1 | R4105 |
| 190 | EXXY0018701 | Crystal | 1 | X4100 |
| 191 | MBK64732501 | Can,Shield | 1 | SC000 |
| 192 | MBK64752501 | Can,Shield | 1 | SC001 |
| 193 | MBV62321701 | Clip | 9 | SC101,SC102,SC103,SC104,SC105,SC106,SC107,SC108,SC109 |
| 194 | MCE63033001 | Contact | 2 | CN9501,CN9502 |
| 195 | MEZ65049701 | Label | 1 | PID1 |
| 196 | SEVY0005201 | Varistor | 2 | D6202,D6203 |
| 197 | SFBH0008102 | Filter,Bead | 2 | FB6900,FB6903 |
| 198 | SFEY0015301 | Filter,EMI/Power | 1 | FL9201 |
| 199 | EAB62911301 | Microphone,Condenser | 2 | MIC6901,MIC6902 |
| 200 | EAE62286801 | Capacitor,Ceramic,Chip | 5 | C10001 |
| 201 | EAE62502901 | Capacitor,Ceramic,Chip | 1 | C4403 |
| 202 | EAE62522101 | Capacitor,Ceramic,Chip | 1 | C4130 |
| 203 | EAE62685301 | Capacitor,Ceramic,Chip | 2 | C4702,C9202 |
| 204 | EAE62762301 | Capacitor,Ceramic,Chip | 5 | C4119,C4120,C4121,C4126,C9115 |
| 205 | EAE62762401 | Capacitor,Ceramic,Chip | 1 | C3301 |
| 206 | EAE62946601 | Capacitor(High Frequency),Ceramic,Chip | 2 | C1074,C1077 |
| 207 | EAE63421801 | Capacitor,Ceramic,Chip | 3 | C2321,C2322,C4101 |
| 208 | EAE63541901 | Capacitor,Ceramic,Chip | 1 | C4400 |
| 209 | EAE63621501 | Capacitor,Ceramic,Chip | 1 | C4143 |
| 210 | EAE64262401 | Capacitor,Ceramic,Chip | 1 | C4007 |
| 211 | EAE64281701 | Capacitor,TA,Polymer | 1 | C9112 |
| 212 | EAG63772101 | Connector,RF | 4 | SW1001,SW1002,SW1003,SW1004 |
| 213 | EAG64149801 | Connector,I/O | 1 | CN9200 |
| 214 | EAG64651301 | C-Clip | 4 | ANT1001,ANT1002,ANT1003,ANT1004 |
| 215 | EAG64729801 | Connector,BtoB | 1 | CN9900 |
| 216 | EAG64751101 | Connector,BtoB | 1 | CN7100 |
| 217 | EAG64771301 | C-Clip | 2 | ANT6200,ANT6201 |
| 218 | EAG64771401 | C-Clip | 3 | CN9605,CN9606,CN9607 |



Copyright © 2016 LG Electronics. Inc. All right reserved. Only training and service purposes

| No | P/N | Description | Quantity | Location no |
|---|---|---|---|---|
| 219 | EAG64850201 | Socket,DIMM/SIMM | 1 | S9601 |
| 220 | EAG64850601 | Connector,Terminal Block | 1 | CN9100 |
| 221 | EAH61693001 | Diode,TVS | 2 | D6200,D6201 |
| 222 | EAH61872601 | Diode,TVS | 1 | D9201 |
| 223 | EAH61992801 | Diode,Schottky | 1 | D4400 |
| 224 | EAM62072101 | Filter,Bead | 2 | L6800,L6801 |
| 225 | EAM62230101 | Filter,Bead | 3 | FB6613,FB6614,FB6615 |
| 226 | EAM62791701 | Filter,Separator | 1 | FL6003 |
| 227 | EAM62792601 | Filter,Separator,Switch | 1 | FL2002 |
| 228 | EAM63130101 | Filter,Saw | 1 | FL6002 |
| 229 | EAM63150101 | Filter,EMI/Power | 1 | FL7104 |
| 230 | EAE62282201 | Capacitor,Ceramic,Chip | 3 | C1069,C2007,C6621 |
| 231 | EAE62506501 | Capacitor,Ceramic,Chip | 5 | C3300,C4136,C4139,C4140,C4409 |
| 232 | EAE62924201 | Capacitor(High Frequency),Ceramic,Chip | 1 | C4022 |
| 233 | EAE62945801 | Capacitor(High Frequency),Ceramic,Chip | 2 | L4002,L4004 |
| 234 | EAE62946501 | Capacitor(High Frequency),Ceramic,Chip | 2 | C2027,C2029 |
| 235 | EAE62945901 | Capacitor(High Frequency),Ceramic,Chip | 1 | L4007 |
| 236 | EAE62946001 | Capacitor(High Frequency),Ceramic,Chip | 1 | L4003 |
| 237 | EAE62946701 | Capacitor(High Frequency),Ceramic,Chip | 1 | C4026 |
| 238 | EAE62963701 | Capacitor(High Frequency),Ceramic,Chip | 1 | C4015 |
| 239 | EAE63023601 | Capacitor(High Frequency),Ceramic,Chip | 1 | C6007 |
| 240 | EAP61747501 | Inductor,Multilayer,Chip | 2 | C1007,C1019 |
| 241 | EAP61767701 | Inductor,Multilayer,Chip | 3 | C1052,C1070,L2027 |
| 242 | EAP61767801 | Inductor,Multilayer,Chip | 1 | C2026 |
| 243 | EAP61925901 | Inductor,Multilayer,Chip | 4 | C2001,C2003,C2008,C2010 |
| 244 | EAP61946101 | Inductor,Multilayer,Chip | 1 | C1004 |
| 245 | EAP62107901 | Inductor,Multilayer,Chip | 2 | C1002,L1043 |
| 246 | EAP62108101 | Inductor,Multilayer,Chip | 3 | C3021,C6023,L1040 |
| 247 | EAP62108201 | Inductor,Multilayer,Chip | 1 | L3014 |
| 248 | EAP62108301 | Inductor,Multilayer,Chip | 2 | C1005,C4024 |
| 249 | EAP62108401 | Inductor,Multilayer,Chip | 4 | L2002,L2006,L2014,L2022 |
| 250 | EAP62108501 | Inductor,Multilayer,Chip | 6 | C1029,C1039,L4015,L4016,L4019,L4020 |
| 251 | EAP62108601 | Inductor,Multilayer,Chip | 2 | L2011,L2018 |
| 252 | EAP62108701 | Inductor,Multilayer,Chip | 1 | L1045 |
| 253 | EAP62109001 | Inductor,Multilayer,Chip | 3 | C2018,C2019,C2021 |
| 254 | EAP62186301 | Inductor,Multilayer,Chip | 1 | C1075 |
| 255 | EAP62225901 | Inductor,Multilayer,Chip | 3 | C1025,C6006,L1033 |
| 256 | EAP62226001 | Inductor,Multilayer,Chip | 1 | C2013 |
| 257 | EAP62226101 | Inductor,Multilayer,Chip | 4 | C1026,C1062,C1076,L1046 |
| 258 | EAP62226201 | Inductor,Multilayer,Chip | 4 | C4020,L1049,L2003,L2008 |
| 259 | EAP62226301 | Inductor,Multilayer,Chip | 6 | C1033,L1025,L2012,L2015,L2016,L6007 |
| 260 | EAE63162401 | Capacitor,Ceramic,Chip | 1 | C4405 |
| 261 | EAP63586201 | Inductor,Multilayer,Chip | 1 | R1010 |
| 262 | EAP62226401 | Inductor,Multilayer,Chip | 6 | C2011,L1042,L2023,L4009,L6004,L6011 |



Copyright © 2016 LG Electronics. Inc. All right reserved. Only training and service purposes

| No | P/N | Description | Quantity | Location no |
|---|---|---|---|---|
| 263 | EAP62226501 | Inductor,Multilayer,Chip | 5 | C2014,C2017,C4014,L2032,L4021 |
| 264 | EAP62226601 | Inductor,Multilayer,Chip | 2 | L2029,L2033 |
| 265 | EAP62526401 | Inductor,Multilayer,Chip | 2 | C4001,L2031 |
| 266 | EAP62886001 | Inductor,Multilayer,Chip | 1 | L6012 |
| 267 | EAP62886101 | Inductor,Multilayer,Chip | 1 | C4002 |
| 268 | EAP63746901 | Inductor,Wire Wound,Chip | 1 | L4130 |
| 269 | EAP63786501 | Inductor,Wire Wound,Chip | 3 | L4131,L4132,L4133 |
| 270 | EBC62581901 | Resistor,Chip | 3 | R2106,R6204,R6206 |
| 271 | ECCH0007803 | Capacitor,Ceramic,Chip | 4 | C4401,C4402,C4404,C4406 |
| 272 | ECCH0009103 | Capacitor,Ceramic,Chip | 55 | C1001,C1009,C1010,C1011,C1012,C1016,C1017,C1027,C1030,C1031,C1032,C1034,C1035,C1036,C1037,C1040,C1051,C1053,C1054,C1055,C1059,C1066,C1068,C1071,C1079,C2004,C2005,C2006,C2016,C2084,C2085,C3004,C3013,C3016,C3018,C3020,C4021,C4027,C4032,C4033,C4034,C4102,C4103,C6002,C6003,C6005,C6009,C6013,C6017,C6020,C6022,C9114,L1001,L2025,L6013 |
| 273 | ECCH0009104 | Capacitor,Ceramic,Chip | 15 | C1065,C1067,C1080,C1081,C3014,C3017,C6004,C6018,C6019,C6202,C6203,C6627,C6628,C6902,R1021 |
| 274 | ECCH0009106 | Capacitor,Ceramic,Chip | 5 | C1064,C1072,C6010,C6210,L3015 |
| 275 | ECCH0009208 | Capacitor,Ceramic,Chip | 3 | L1030,L3018,L3019 |
| 276 | ECCH0009502 | Capacitor,Ceramic,Chip | 3 | L3016,L4001,L6016 |
| 277 | ECCH0017501 | Capacitor,Ceramic,Chip | 6 | C2301,C2302,C2303,C2320,C2323,C2324 |
| 278 | ECZH0025916 | Capacitor,Ceramic,Chip | 1 | C9602 |
| 279 | ECZH0025911 | Capacitor,Ceramic,Chip | 3 | C2002,C4016,L2009 |
| 280 | ECZH0025920 | Capacitor,Ceramic,Chip | 3 | C2015,C6700,C6701 |
| 281 | ERHY0009506 | Resistor,Chip | 4 | R2220,R2222,R2225,R2227 |
| 282 | SAFO0000401 | Wire Pad,Open | 7 | R2215,R2244,R2245,R2301,R2302,R2309,R7104 |
| 283 | SAFP0000401 | Wire Pad,Short | 19 | R2213,R2214,R2218,R2300,R2303,R2308,R5002,R5003,R5009,R5200,R6007,R6008,R6625,R6900,R6901,R7106,R7107,R7108,R9123 |
| 284 | EBR81986901 | PCB Assembly,Main,SMT Top | 1 | EBR071700 |
| 285 | EAX66948401 | PCB,Main | 1 | EAX010000 |
| 286 | RAA34548901 | Resin,PC | 0 | RAA050100 |
| 287 | SAD35826401 | Software,Mobile | 1 | SAD010000 |
| 288 | MJN69947501 | Tape,Protect | 1 | MJN061100 |
| 289 | MEZ66194201 | Label,Approval | 1 | MEZ002100 |
| 290 | AAD87909501 | Addition Assembly | 1 | AAD000000 |
| 291 | ACO88676101 | Cover Assembly,Battery | 1 | ACO02 |
| 292 | MCK69165801 | Cover,Battery | 1 | MCK004100 |
| 293 | EAB64228801 | Earphone,Stereo | 1 | EAB010200 |
| 294 | EAY62751801 | Adapters | 1 | EAY060000 |
| 295 | EAC63198407 | Rechargeable Battery,Lithium Ion | 1 | EAC00 |
| 296 | EAD62377902 | Cable,Assembly | 1 | EAD010000 |
| 297 | MBM65477901 | Card,Quick Reference | 1 | MBM062600 |
| 298 | MFL69443501 | Manual,Operation | 0 | MFL053800 |
| 299 | MJN69987201 | Tape,USP Film | 1 | MJN107400 |
| 300 | AGF78278904 | Package Assembly | 1 | AGF000000 |



Copyright © 2016 LG Electronics. Inc. All right reserved. Only training and service purposes

LG